EasySolar 12V and 24V: the all-in-one solar power solution

www.victronenergy.com



All-in-one solar power solution

The EasySolar combines a MPPT solar charge controller, an inverter/charger and AC distribution in one enclosure.
The product is easy to install, with a minimum of wiring.

The solar charge controller: Blue Solar MPPT 100/50

Up to three strings of PV panels can be connected with three sets of MC4 (PV-ST01) PV connectors.

The inverter/charger: MultiPlus Compact 12/1600/70 or 24/1600/40

The MPPT charge controller and the MultiPlus Compact inverter/charger share the DC battery cables (included). The batteries can be charged with solar power (BlueSolar MPPT) and/or with AC power (inverter/charger) from the utility grid or a genset.

AC distribution

The AC distribution consists of a RCD (30mA/16A) and four AC outputs protected by two 10A and two 16A circuit breakers.
One 16A output is controlled by the AC input: it will switch on only when AC is available.

PowerAssist

Unique PowerAssist technology protects the utility or generator supply from being overloaded by adding extra inverter power when needed.

Unique solar application software

Several software programs (Assistants) are available to configure the system for various grid interactive or stand-alone applications. Please see http://www.victronenergy.nl/support-and-downloads/software/

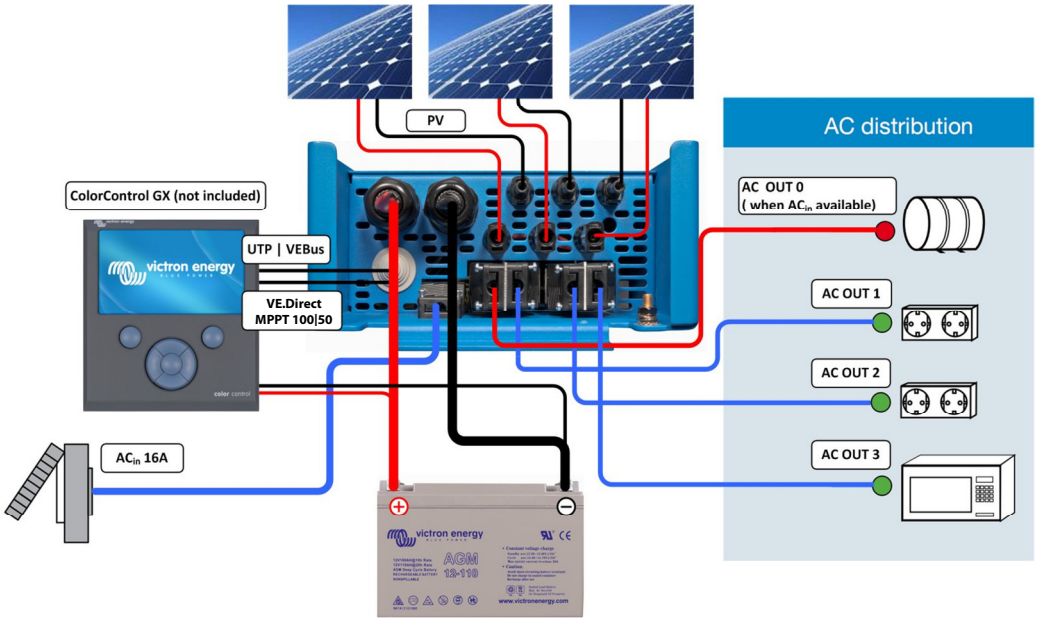

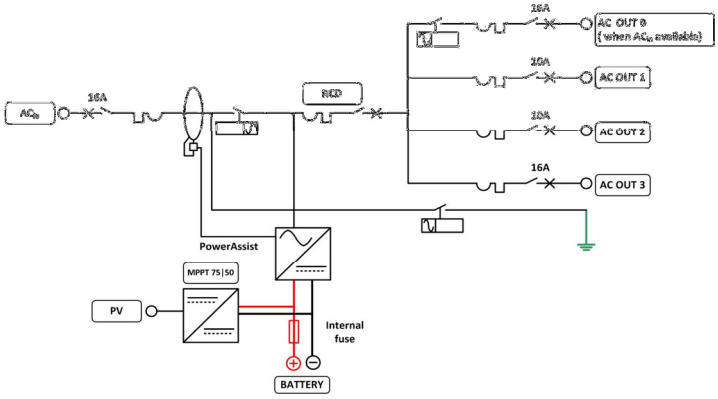

Victron Energy B.V. | De Paal 35 | 1351 JG Almere | The Netherlands
General phone: +31 (0)36 535 97 00 | Fax: +31 (0)36 535 97 40
E-mail: sales@victronenergy.com | **www.victronenergy.com**

EasySolar	EasySolar 12/1600/70	EasySolar 24/1600/40
Inverter/charger		
Transfer switch	16 A	
INVERTER		
Input voltage range	9,5 – 17 V	19 – 33 V
"Heavy duty" output AC 0	16 A	
Output AC1, 2, 3	Output voltage: 230 VAC ± 2% Frequency: 50 Hz ± 0,1% (1)	
Cont. output power at 25 °C (3)	1600 VA / 1300 W	
Cont. output power at 40 °C	1200 W	
Peak power	3000 W	
Maximum efficiency	92%	94%
Zero-load power	8 W	10 W
Zero load power in search mode	2 W	3 W
CHARGER		
AC Input	Input voltage range: 187-265 VAC Input frequency: 45 – 65 Hz Power factor: 1	
Charge voltage 'absorption'	14,4 / 28,8 V	
Charge voltage 'float'	13,8 / 27,6 V	
Storage mode	13,2 / 26,4 V	
Charge current house battery (4)	70 A	40 A
Charge current starter battery (A)	4	
Battery temperature sensor	yes	
Programmable relay (5)	yes	
Protection (2)	a - g	
Solar Charge Controller		
Maximum output current	50 A	
Maximum PV power, 6a,b)	700 W	1400 W
Maximum PV open circuit voltage	100 V	100 V
Maximum efficiency	98 %	
Self-consumption	10 mA	
Charge voltage 'absorption', default setting	14,4 V	28,8 V
Charge voltage 'float', default setting	13,8 V	27,6 V
Charge algorithm	multi-stage adaptive	
Temperature compensation	-16 mV / °C resp. -32 mV / °C	
Protection	a - g	
COMMON CHARACTERISTICS		
Operating temp. range	-20 to +50°C (fan assisted cooling)	
Humidity (non condensing):	max 95%	
ENCLOSURE		
Material & Colour	aluminium (blue RAL 5012)	
Protection category	IP 21	
Battery-connection	Battery cables of 1.5 meter	
PV connection	Three sets of MC4 (PV-ST01) PV connectors.	
230 V AC-connection	G-ST18i connector	
Weight	15 kg	
Dimensions (hxwxd)	745 x 214 x 110 mm	
STANDARDS		
Safety	EN 60335-1, EN 60335-2-29, EN 62109	
Emission / Immunity	EN55014-1, EN 55014-2, EN 61000-3-3	
Automotive Directive	2004/104/EC	

1) Can be adjusted to 60Hz and to 240V
2) Protection
a. Output short circuit
b. Overload
c. Battery voltage too high
d. Battery voltage too low
e. Temperature too high
f. 230VAC on inverter output
g. Input voltage ripple too high

3) Non linear load, crest factor 3:1
4) At 25 °C ambient
5) Programmable relay which can be set for general alarm, DC undervoltage or genset start signal function
6a) If more PV power is connected, the controller will limit input power to 700W resp. 1400W
6b) PV voltage must exceed Vbat + 5V for the controller to start. Thereafter minimum PV voltage is Vbat + 1V

Victron Energy B.V. | De Paal 35 | 1351 JG Almere | The Netherlands
General phone: +31 (0)36 535 97 00 | Fax: +31 (0)36 535 97 40
E-mail: sales@victronenergy.com | **www.victronenergy.com**