ECO-ICM 8000 /48 HV Off grid Energy Storage Inverter

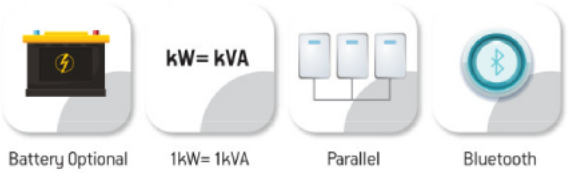



Product Snapshot

Model: 3KW/5.5KW/8KW
Normal Voltage: 230VAC
Frequency Range: 50Hz/60Hz

Anti-Dust Kit:

After installing this anti-dust kit, inverter will automatically detect this kit and activate internal thermal sensor to adjust internal temperature. By virtue of the dustproof design, it dramatically increases product reliability in harsh environment.





Key Features:

- Pure sine wave solar inverter
- Output power factor 1
- Parallel operation up to 9 units
- High PV input voltage range
- Battery independent design
- Built-in 100A MPPT solar charger
- Battery equalization function to optimize battery performance and extend lifecycle
- Built-in anti-dusk kit for harsh environment

Hybrid Operation

- **With battery connected**





- **Without battery connected**





Single phase output up to 49.5KW using 9 units

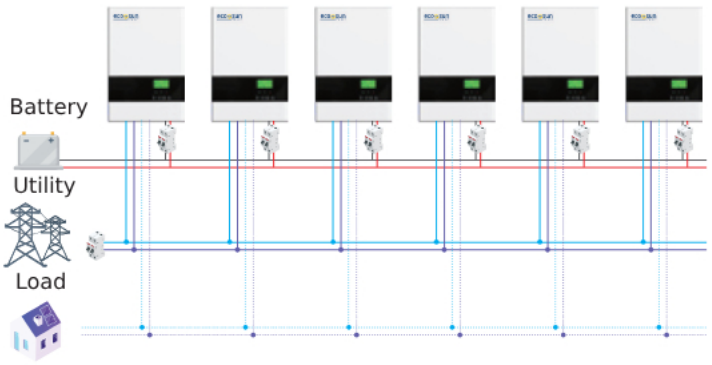

Three phase output using either 3 units (16.6 KW) or max 9 units (49.5KW)

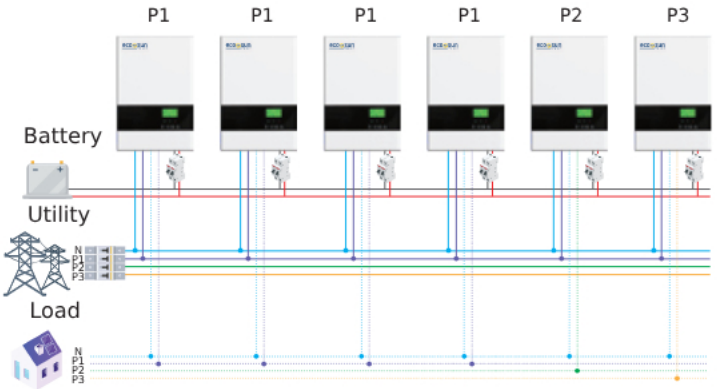

ECO-ICM 3000-8000 24/48 HM

Wall Mounted Integrated Solar Inverter Technical Specification
Built-in MPPT Solar Controller

MODEL Rated	ECO-ICM8000-48HV
INPUT	
Voltage	230 VAC
Selectable Voltage Range	170-280 VAC (For Personal Computers) ; 90-280VAC (For Home Appliances)
Frequency Range	50 Hz/60 Hz (Auto sensing)
OUTPUT	
ACVoltage Regulation (Batt. Mode)	230 VAC ±5%
Surge Power	16000 VA
Efficiency (Peak)	up to 93.5%
Transfer Time	10 ms (For Personal Computers) ; 20 ms (For Home Appliances)
Wavefrom	Pure sine wave
BATTERY	
Battery Voltage	48 VDC
Floating Charge Voltage	54 VDC
Overcharge Protection	63 VDC
SOLAR CHARGER & AC CHARGER	
Maximum PV Array Open Circuit Voltage	500 VDC
Maximum PV Array Power	4000 W X2
MPPT Range @ Operating Voltage	120~450 VDC
Maximum Solar Charge Current	120 A
Maximum AC Charge Current	120 A
Maximum Charge Current	120 A
PHYSICAL	
Dimension, D x W x H (mm)	420x561,6x152,4
Net Weight (kgs)	21
Communication Interface	USB/RS232
ENVIRONMENT	
Humidity	5% to 95% Relative Humiditiy (Non-condesnsing)
Operating Temperature	-10^{0}C to 50^0 C
Storage Temperature	-15^{0}C to 60^{0}C

Product features may change without notice
ECO//SUN Ltd. is not responsible for any typographical errors
This document supersedes all previous ones