Energy Meter ET112 manual



1. Introduction and usage

This document is the manual for the single phase max 100 A Energy Meter.

The Energy Meter can be used for four things:

1. Grid meter, and used as control input for an ESS System (1).
2. Measure the output of a PV Inverter
3. Measure the output of a AC Genset

The meter is connected to the GX device (e.g. CCGX, Cerbo GX). There are two options in its wiring:

1. Direct connection, either using the RS485 to USB interface with 1.8m cable length, or the 5.0m cable.
2. Wireless connection via Zigbee

Victron part number REL300100000 is the ET112-DIN.AV01.X.S1.X from Carlo Gavazzi. And that is the model we keep in stock.

Other ET112 models from Carlo Gavazzi can also be used, as the communication is the same.

2. AC Wiring

Configuration Options

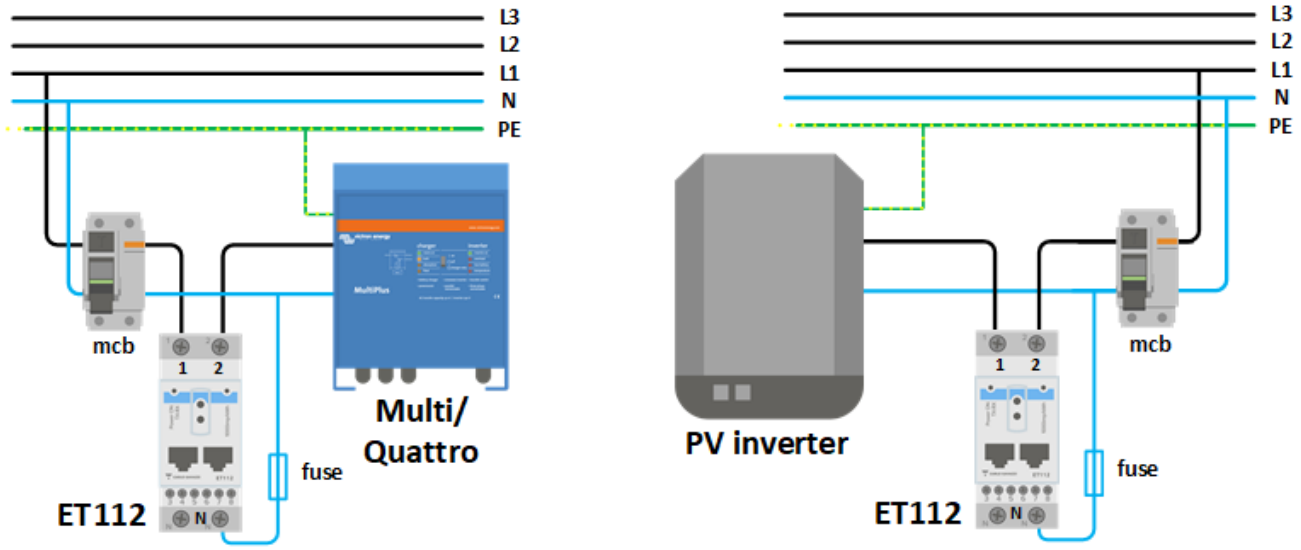

Grid Meter - Wiring when used as a grid meter. **PV Inverter** - Wiring when used to measure PV inverter or AC Genset.

This configuration option of either Grid Meter, or PV Inverter is set in the GX device. That selection will effect how the system should be wired, and how the information received from the meter is displayed on the screen.

Example Diagram

In this example configuration, a single ET112 is configured as a **Grid Meter** and will measure the grid import/export of an ESS system with a AC PV inverter. While the exact production of the AC PV inverter will not be seen, this is still a useful configuration as it allows the AC PV production to first flow to the non-essential loads on that same circuit.

- A surplus will be used to charge the batteries (seen as export and tried to reduce to grid set point eg 0).
- A deficiency will trigger a discharge of the batteries (seen as import, and tried to reduce to grid set point).

This can be useful if the Victron ESS system is installed as a retrofit to an existing AC Solar inverter installation with some larger loads that aren't wired through the Multiplus.

If you wanted to see PV production separately you could use the “single phase dual function mode” of the ET340.

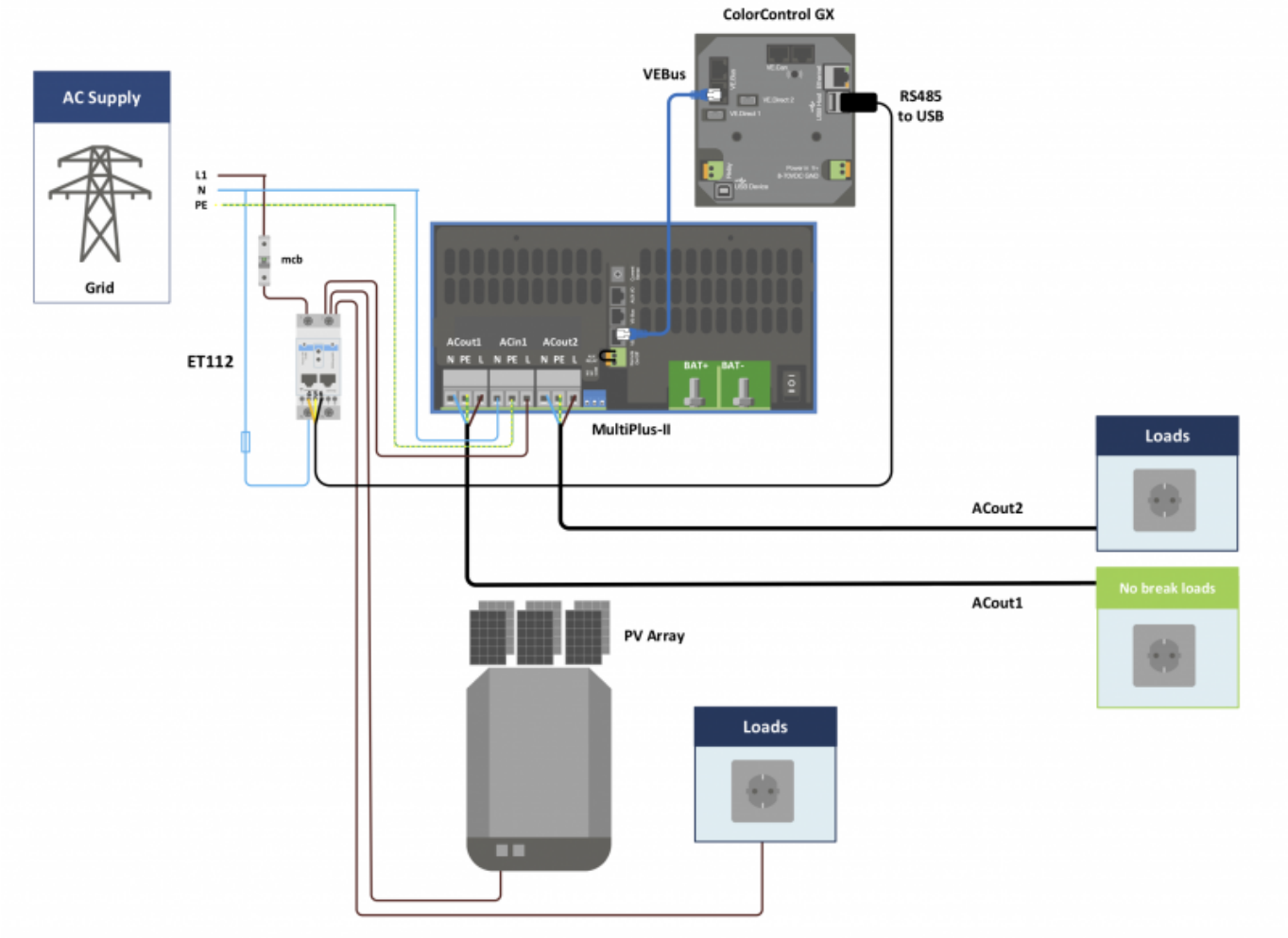

3. Connection to GX device

Option A: wireless Zigbee connection

Step 1.

Connect the Zigbee to USB converter to the CCGX using the supplied USB cable. A few seconds after connecting, the active LED should be on and the TX/RX LED should be blinking (the converter takes its power from the CCGX, so the GX device needs to be switched on as well).



Step 2.

Connect the Zigbee to RS485 converter to the ET112 energy meter:

Zigbee Converter	Energy meter	Color
GND	Terminal 6	Black
A	Terminal 4	Orange
B	Terminal 5	Yellow

Make sure only one Zigbee device is powered up right now: the Zigbee to USB converter connected to the GX device. Power down all others. *If you don't do this, the Zigbee to RS485 converter may be connected permanently to another Zigbee device.*

Step 4.

Connect the 12V DC power supply to the Zigbee to RS485 converter. When the power is switched on, check the LEDs again.

note on old and new zigbee converters

Please note that there is a new zigbee converter available now, that is -not- backwards compatible with the old converters. If you have a non compatible set, please ask your supplier for a correct version.

'old' type:

ASS300400100 - Zigbee to RS485 converter partnumber: DRF2619C

ASS300400100 - Zigbee to USB converter partnumber: DRF2618A

'new' type:

ASS300420100 - Zigbee to RS485 converter partnumber: DRF2659C

ASS300420200 - Zigbee to USB converter partnumber: DRF2658C

note on GX firmware versions:

for the new type Zigbee converters, Venus OS v2.54 is the minimum required software version

Option B: Wired connection to GX device

Connect the Energy Meter to the GX device using the USB to RS485 cable. The RS485 to USB interface cable between the GX device and the Energy Meter can be extended up to 100 meters; make sure that the extensions of the Data+ (orange) and Data- (yellow) wires form a twisted pair.

RS485 Converter	Energy meter	Suggested CAT5 extension
Orange (Data+)	Terminal 4	Orange
Yellow (Data-)	Terminal 5	Orange/White
Black (GND)	Terminal 6	Brown

The red, green and brown wire coming out of the USB to RS485 cable are not used. Note: You can wire on a RJ45 plug which can plug into the front of either RJ45 socket of the Energy meter, it has the same pin out.

Note on cable length extensions and bus termination

To ensure signal integrity and robust operation, particularly ensure that;

Extension cabling complies with the minimum cross-sectional area specifications in the USB to RS485 data sheet.

Extension cabling has appropriate shielding and twisted pair cores

The original cable attached to the Victron RS485 to USB interface is reduced to a maximum length of 20cm in installations where the total cable length is over 10m or there are installation/site specific interference issues – in this case appropriate/high quality cabling should be used for the entire cable length, rather than only for the extension length.

Cabling is installed separated/away from the main DC or AC power cabling.

All wiring is properly terminated (including unused wires) and properly isolated from weather/water ingress.

RS485 networks are traditionally terminated at both ends with 120Ω terminators. This is not required if the cable length is short and you are using the Victron supplied RS485 to USB lengths, but may be required if they are extended for longer cable runs.

For detailed wiring/installation notes and specifications refer to the Victron RS485 to USB interface cable ‘Datasheet’.

3. Configuration

After proper connection and powering up, the meter will be visible on the CCGX in the Settings → Energy Meters menu:



The menu lists every meter found. And in the gray box at the right side it shows the configured function.

After selecting a meter, see its detailed settings:

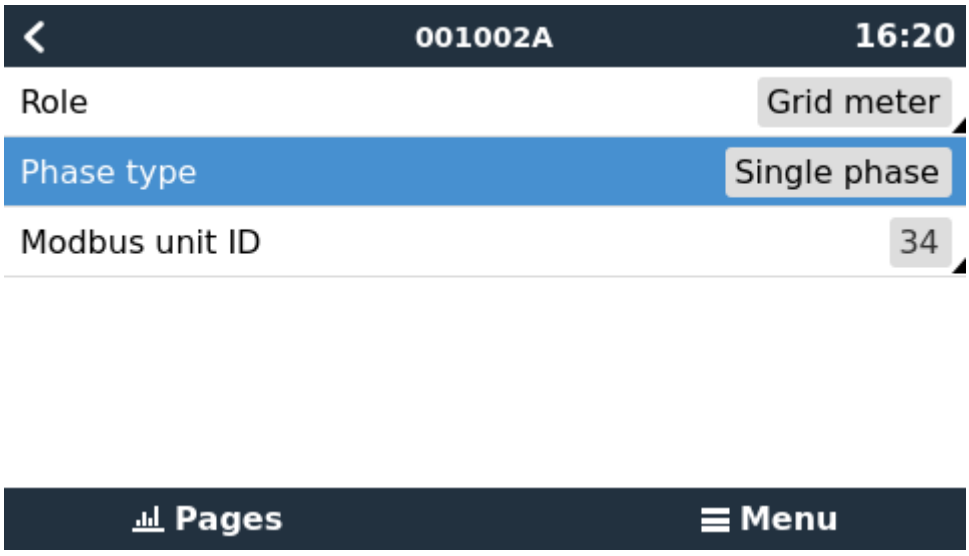

4. Multiple ET112 Meters in one system

To connect multiple Energy Meters, wire each meter to a separate RS485-USB converter. Which are then each plugged into a separate USB socket on the CCGX. See NOTE 1 Below

Connecting multiple ET112 meters to the same RS485-USB cable is not possible: the ET112 meter has no display and its Modbus address can therefor not be changed.

Note 1 You can connect the ET112 in parallel, just need to change the MOD address to another

number using the Configuration software from the supplier which is free from Carlo Gavazzi Web site.

DISQUS

View the discussion thread.

From:
https://www.victronenergy.com/live/ - **Victron Energy**

Permanent link:
https://www.victronenergy.com/live/energy-meters:et112

Last update: **2020-08-13 07:26**

