GC875-MG

DATASHEET

Deep Cycle Flooded Battery Block

Magnum Power flooded battery blocks, provide high integrity and reliability for commercial and industrial applications. The unique design ensures cyclic stability, longer life and higher capacity than similar deep cycle batteries used in deep discharge applications.

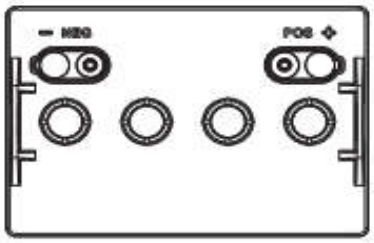



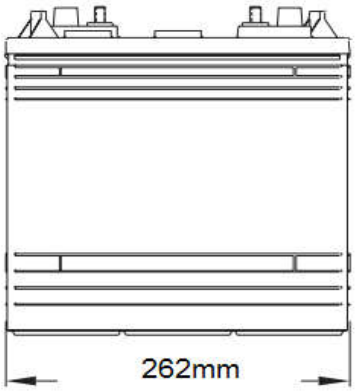

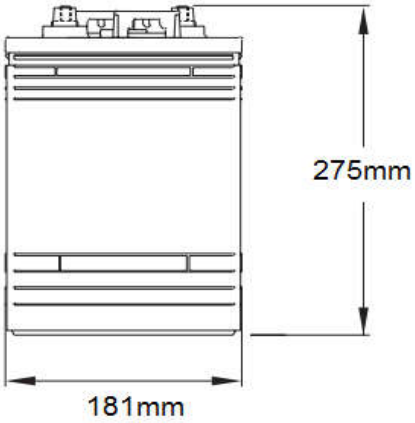

Key Features and Benefits

CYCLE LIFE

- Advanced manufacturing techniques provide a cycle life of 800 cycles at 50% depth of discharge on temperature of 25°C
- High-density plates and reinforced grid design help the blocks withstand continual deep cycling

ENHANCED PERFORMANCE

- Special alloy and separator material reduces water consumption

Mechanical Specifications

Length	262 mm
Width	181 mm
Total Height	275 mm
Weight	29,00 kgr
No of Cells	4
Electrolyte S.G.	1.28
Type of Elextrolyte	Flooded
Possitive grid material	Antimony Lead Alloy
Negative grid material	
Container & cover material	Polypropelene plastic
Separator Type	Microporous rubber with GM
Terminal Type	ELPT*

* Embedded Low Profile Terminal

Electrical Specifcations

Volts	8V
50% DOD Voltage cut off	7.7V
Internal Resistance	4 mΩ @ 25°C
Self Discharge	5-10% per month @ 25°C
Charge Temperature	-10°C to 50°C
Discharge Temperature	-20°C to 50°C

Amp Hours (AH)				Minutes of Discharge		
100 HR	20 HR	5 HR	3 HR	@25A	@56A	@75A
200	175	150	125	300	-	80

Certifications

Magnum Power batteries are certifed to multiple standards and compliance:

- ISO, UL, QS, and TUV standards

GC875-MG

DATASHEET

Electrical Specifcations

Max Charge/Discharge Currents	Peak (5sec)	Peak (10sec)	Max continuous	Recomended Max continuous
Charge	1C5	0.75C5	0.5C5	0.3C5
Discharge	2C5	1.5C5	1C5	0.5C5

Cycle Life in relation to Depth of Discharge

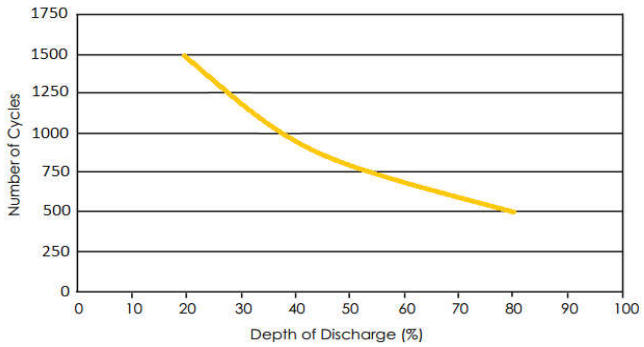

Percent Capacity vs Temperature

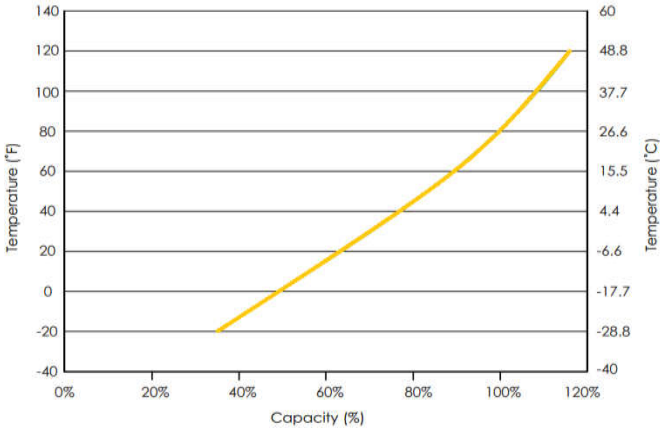

Self Discharge Rate

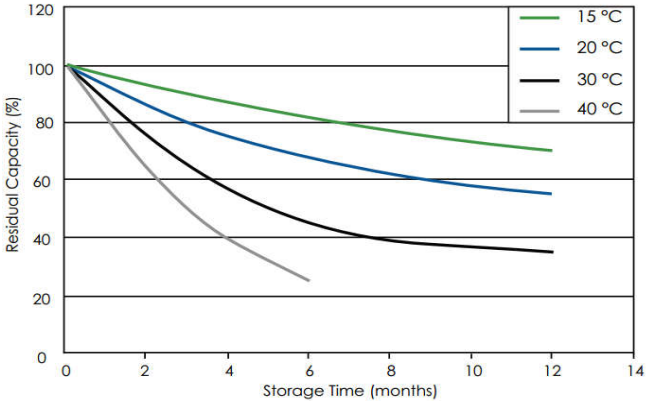

Updated 01-08-2016

Country Distributer

GRK BATTERIES

www.gr-kiros.gr
info@gr-kiros.gr

ΘΕΣΣΑΛΟΝΙΚΗΣ 105 - ΚΑΤΕΡΙΝΗ - 60134
ΤΗΛ. 23510-75613 ΦΑΞ 23510-75518

Local Seler