1. Battery Pack Nominal Specification

			Specification	Remarks
4.1	Typical Capacity		152Ah	0.5C_5A discharge
4.2	Minimum Capacity		150Ah	0.5C_5A discharge
4.3 Nominal Voltage			12.8V	
4.4 Discharging Voltage (Min)			10.0V	
4.5 Charging Voltage (Max)			14.60±0.05V	
4.6 Charging Current（Std）			75A	0.5C_5A（0 ~ +45°C）
4.7 Discharging Current（Std）			75A	0.5C_5A（-20 ~ +60°C）
4.8 Max Charging Current			150A	1.0C_5A（0 ~ +45°C）
4.9 Discharging Current（Max/Peak 3s）			300A	2.0C_5A（-20 ~ +60°C）
4.10 Max continuous Discharging Current			150A	1.0C_5A（5 ~ +45°C）
4.11 Battery Internal Impedance			≤20mΩ	AC Impedance 1kHz
4.12 Combination Support			4S or 4P	4pcs Series or Parallel
4.13 Battery Dimension			483*170*240mm	Approximate
4.14 Battery Weight			16.0kg	About
4.15 Battery Cycle life			≥6000	0.5C_5A（0 ~ +45°C）
4.16 Storage temperature range		＜ 1 Month	-20 ~ +60°C	
		＜ 3 Month	-20 ~ +45°C	
		＜ 12 Month	-20 ~ +25°C	
4.17 Charging temperature range			0 ~ +45°C	

2. Battery Outline Drawing



3. Battery Dimension

Max: Length 483mm* Width 170mm* Height 240mm

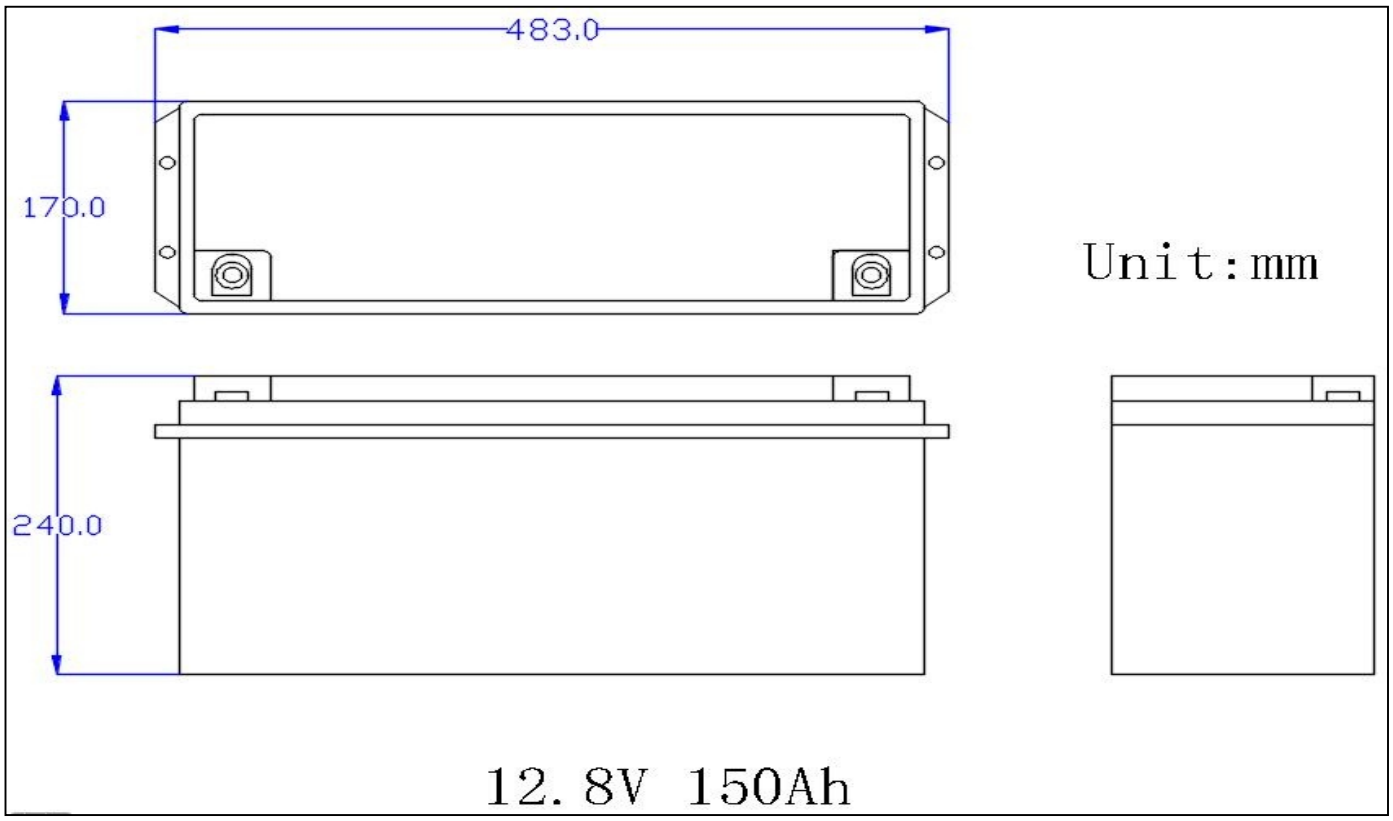

4. Discharge Curve of the Battery

