HAWKER® MODULAR CHARGERS

KEEP ON GOING!

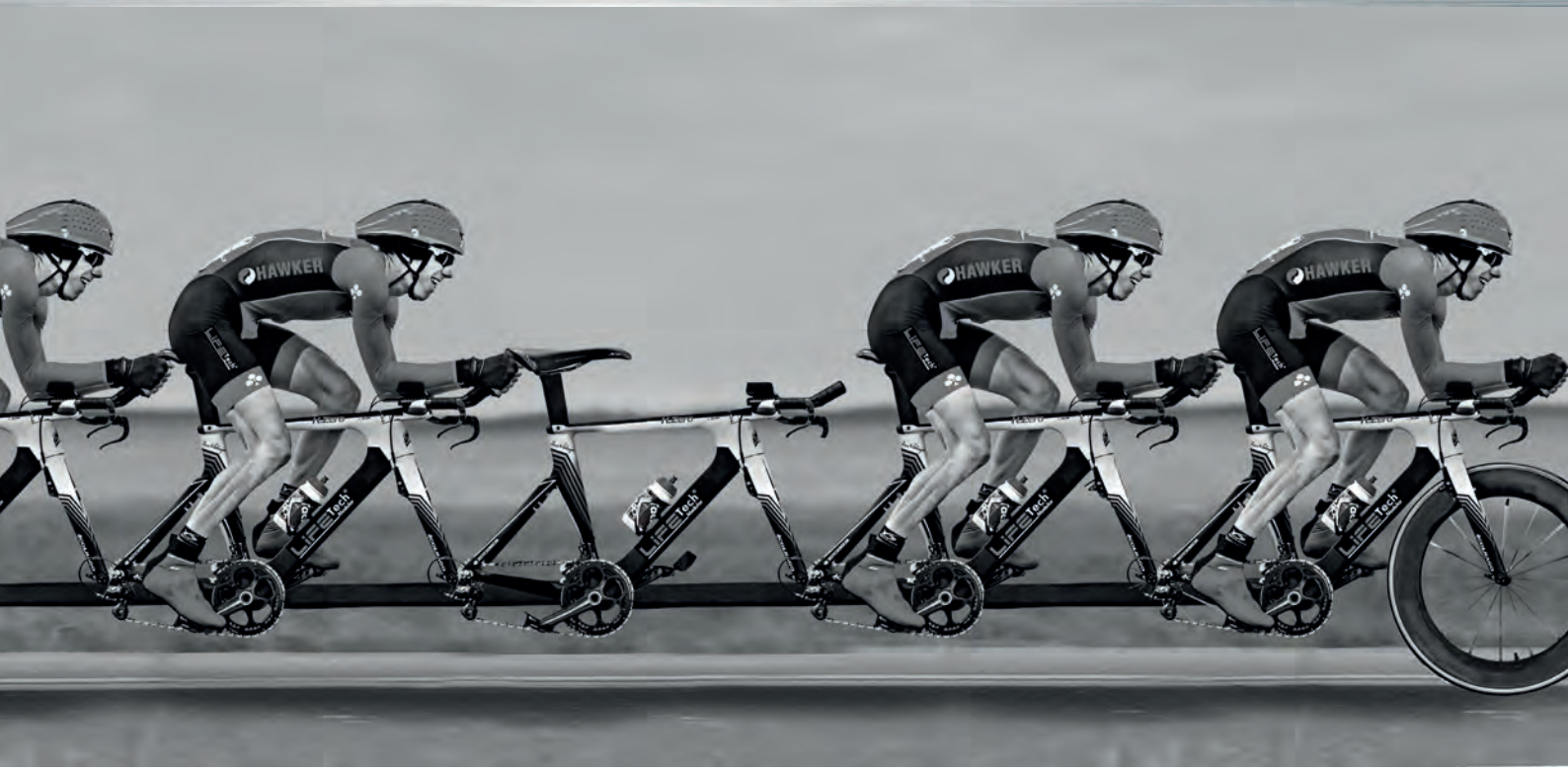

EVEN WHEN PART OF THE TEAM IS MISSING...

LiFETech® Modular

LiFEiQ™ MODULAR

TECHNICAL DATA

HAWKER®

Lifetech® Modular

MATCHING TABLE OF CAPACITY AND RECHARGE TIME - SINGLE PHASE AND THREE PHASE

Charging Times (+/- 0,5 h) from 80% DOD at 30°C

CHARGING PROFILES									Gel/Evolution (PzV, PzVB)		NXS Blocs	
Slow Charge PzS, PzB, PzM						9 h	10.5 h	12 h				
Heavy duty flooded PzS, PzB, PzQ			7 h	8 h	9 h				@60% 8 h	@60% 9 h	Charge rate @ 0.7	Charge rate @ 0.2
Standard flooded PzS, PzB, PzM (WL8)			6 h	7 h	8 h				@80% 11 h	@80% 12 h	40% - 80% SOC 0.6 h 20% - 100% SOC 4.2 h	40% - 80% SOC 1.25 h 20% - 100% SOC 4.7 h
Airmix with PzS, PzB, PzM (WL13), PzQ			5.5 h	6.5 h	7.5 h							
	Configuration	Volt	C_5Min		C_5Max	C_5Min		C_5Max	C_5Min	C_5Max	C_5Min	C_5Max
SINGLE PHASE												
TC1 LT Modular 12V 1kW*	Contr POUT**	12	108	189	208	208	245	290	123	165	39	135
	MAX POUT		144	252	277	277	327	387	164	220	51	180
TC1 LT Modular 24V 1kW*	Contr POUT**	24	108	189	208	208	245	290	123	165	39	135
	MAX POUT		144	252	277	277	327	387	164	220	51	180
TC1 LT Modular 24V 2kW	Contr POUT**		196	343	377	377	445	527	223	300	70	245
	MAX POUT		288	503	554	554	655	774	327	440	103	354
TC1 LT Modular 24V 3kW	Contr POUT**		380	664	731	731	864	1022	432	581	136	354
	MAX POUT		432	755	831	831	982	1161	491	661	154	354
TC1 LT Modular 36/48V 1kW*	Contr POUT**	36	64	112	123	123	145	172	73	98	23	80
	MAX POUT		100	175	192	192	227	269	114	153	36	125
TC1 LT Modular 36/48V 2kW	Contr POUT**		136	238	262	262	309	366	155	208	49	170
	MAX POUT		192	336	369	369	436	516	218	294	69	240
TC1 LT Modular 36/48V 3kW	Contr POUT**		240	420	462	462	545	645	273	367	86	300
	MAX POUT		300	524	577	577	682	806	341	459	107	354
TC1 LT Modular 36/48V 1kW*	MAX POUT	48	72	126	138	138	164	194	82	110	26	90
TC1 LT Modular 36/48V 2kW	Contr POUT**		98	171	188	188	223	263	111	150	35	123
	MAX POUT		144	252	277	277	327	387	164	220	51	180
TC1 LT Modular 36/48V 3kW	Contr POUT**		172	301	331	331	391	462	195	263	61	215
	MAX POUT		216	378	415	415	491	581	245	330	77	270
THREE PHASE												
TC3 LT Modular 24/36/48V 3.5kW	MAX POUT	24	280	490	538	538	636	753	318	428	100	350
TC3 LT Modular 24/36/48V 7kW	Contr POUT**		384	671	738	738	873	1032	436	587	137	354
	Contr POUT1**		512	895	985	985	1164	1376	582	783	183	354
	MAX POUT		560	979	1077	1077	1273	1505	636	856	200	354
TC3 LT Modular 24/36/48V 10.5kW	Contr POUT**		652	1140	1254	1254	1482	1550	741	997	233	354
	MAX POUT		840	1469	1550				955	1120	300	354
TC3 LT Modular 24/36/48V 14kW	MAX POUT		1120	1550								
TC3 LT Modular 24/36/48V 17.5kW	MAX POUT		1280	1550								
TC3 LT Modular 24/36/48V 21kW	MAX POUT		1280	1550								
TC3 LT Modular 24/36/48V 3.5kW	MAX POUT	36	260	455	500	500	591	699	295	398	93	325
TC3 LT Modular 24/36/48V 7kW	MAX POUT		520	909	1000	1000	1182	1398	591	765	186	354
TC3 LT Modular 24/36/48V 10.5kW	MAX POUT		780	1364	1500	1500	1550		886	1120	279	354
TC3 LT Modular 24/36/48V 14kW	MAX POUT		1040	1550								
TC3 LT Modular 24/36/48V 17.5kW	MAX POUT		1280	1550								
TC3 LT Modular 24/36/48V 21kW	MAX POUT		1280	1550								
TC3 LT Modular 24/36/48V 3.5kW	MAX POUT	48	240	420	462	462	545	645	273	367	86	300
TC3 LT Modular 24/36/48V 7kW	Contr POUT**		328	573	631	631	745	882	373	502	117	354
	Contr POUT1**		440	769	846	846	1000	1183	500	673	157	354
	MAX POUT		480	839	923	923	1091	1290	545	734	171	354
TC3 LT Modular 24/36/48V 10.5kW	Contr POUT**		560	979	1077	1077	1273	1505	636	856	200	354
	MAX POUT		720	1259	1385	1385	1550		818	1101	257	354
TC3 LT Modular 24/36/48V 14kW	MAX POUT		960	1550					1091	1120	343	354
TC3 LT Modular 24/36/48V 17.5kW	MAX POUT		1200	1550								
TC3 LT Modular 24/36/48V 21kW	MAX POUT		1280	1550								
TC3 LT Modular 72/80V 3.5kW	MAX POUT	72	160	280	308	308	364	430	182	245	57	200
TC3 LT Modular 72/80V 7kW	Contr POUT**		240	420	462	462	545	645	273	367	86	300
	MAX POUT		320	559	615	615	727	860	364	489	114	354
TC3 LT Modular 72/80V 10.5kW	Contr POUT**		400	699	769	769	909	1075	455	612	143	354
	MAX POUT		480	839	923	923	1091	1290	545	734	171	354
TC3 LT Modular 72/80V 14kW	MAX POUT		640	1119	1231	1231	1455	1550	727	979	229	354
TC3 LT Modular 72/80V 17.5kW	MAX POUT		800	1399	1538	1538	1550		909	1120	286	354
TC3 LT Modular 72/80V 21kW	MAX POUT		960	1550					1091	1120	343	354
TC3 LT Modular 72/80V 3.5kW	MAX POUT	80	144	252	277	277	327	387	164	220	51	
TC3 LT Modular 72/80V 7kW	MAX POUT		288	503	554	554	655	774	327	440	103	
TC3 LT Modular 72/80V 10.5kW	Contr POUT**		360	629	692	692	818	968	409	550	129	
	MAX POUT		432	755	831	831	982	1161	491	661	154	
TC3 LT Modular 72/80V 14kW	MAX POUT		576	1007	1108	1108	1309	1548	655	881	206	
TC3 LT Modular 72/80V 17.5kW	MAX POUT		720	1259	1385	1385	1550		818	1101	257	
TC3 LT Modular 72/80V 21kW	MAX POUT		864	1510	1550				982	1120	309	

* Airmix not available on 1 kW.

** Output currents set at different values to match specific capacities

Lifetech® Modular

TECHNICAL SPECIFICATION - SINGLE PHASE

Specifications	Units	Stand Alone 1kW **			2kW		3kW	
Battery voltage		12V	24V	36/48V	24V	36/48V	24V	36/48V
Nominal input voltage	Vac	230V +/- 10% / 1ph						
Frequency	Hz	50/60						
Max current draw @ 230Vac	Aac	2.4	4.8	5.1	9.6	10.2	14.4	15.3
AC input cable section	mm²	3 x 1.0			3 x 1.5			
AC input cable length	m	1.5						
Max output current @ 230Vac	Adc	36	36	25/18	72	50/36	108	75/54
Battery cables section	mm²	6			25			
Battery cables length	m	3						
IP protection		IP21						
Operating temperature	°C	0°C to +45°C						
Power factor		0.99						
Idle mode	W	≤10						
Display		2 line LCD						
Weight	kg	2.4			6.7		7.7	
Dimensions (HxWxD)	mm	264 x 148 x 96.5			344 x 250 x 182			
Weight with airmix	kg	** Not available on stand alone 1kW			10.0		11.0	
Dimensions (HxWxD) with airmix	mm	** Not available on stand alone 1kW			435 x 286 x 185			
Cabinet		1 bay stand alone			3 bay (2 modules)		3 bay (3 modules)	

1 bay stand alone

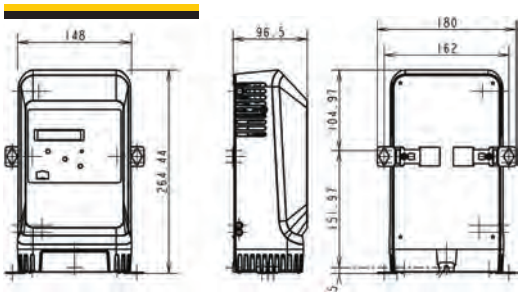

3 bay cabinet

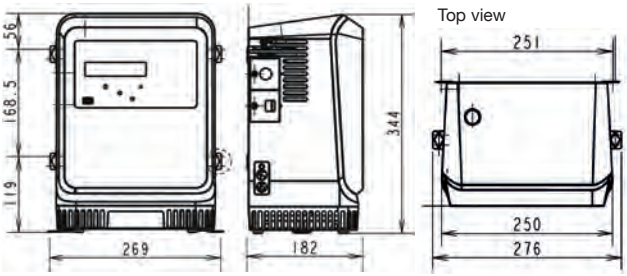

TECHNICAL SPECIFICATION - THREE PHASE

Specifications	Units	3.5kW		7kW		10.5kW		14kW		17.5kW		21kW	
Battery voltage		24/36/48V	72/80V	24/36/48V	72/80V	24/36/48V	72/80V	24/36/48V	72/80V	24/36/48V	72/80V	24/36/48V	72/80V
Nominal input voltage	Vac	400V +/- 10% / 3ph											
Frequency	Hz	50/60											
Max current draw @ 400Vac	Aac	5.6	5.6	11.2	11.2	16.8	16.8	22.4	22.4	28.0	28.0	29.8	33.6
AC input cable section	mm²	4 x 2.5				4 x 4.0				4 x 6.0			
AC input cable length	m	2											
Max output current @ 400Vac	Adc	70/65/60	40/36	140/130/120	80/72	210/195/180	120/108	280/260/240	160/144	320/320/300	200/180	320/320/320	240/216
Battery cables section	mm²	35				70				95			
Battery cables length	m	3											
IP protection		IP21											
Operating temperature	°C	0°C to +45°C											
Power factor		0.95											
Idle mode	W	≤10											
Display		2 line LCD											
Weight	kg	26.0		29.5		33.5		37.0		44.5		48.0	
Dimensions (HxWxD)	mm	508 x 335 x 352								508 x 485 x 352			
Weight with airmix	kg	28.0		31.5		35.5		39.0		46.5		50.0	
Dimensions (HxWxD) with airmix	mm	508 x 335 x 352								508 x 485 x 352			
Cabinet		2 bay (1 module)		2 bay (2 modules)		4 bay (3 modules)		4 bay (4 modules)		6 bay (5 modules)		6 bay (6 modules)	

2 and 4 bay cabinet

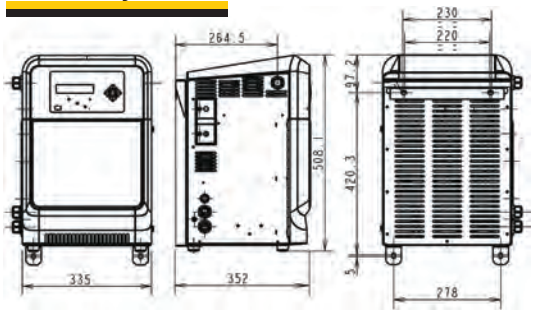

6 bay cabinet

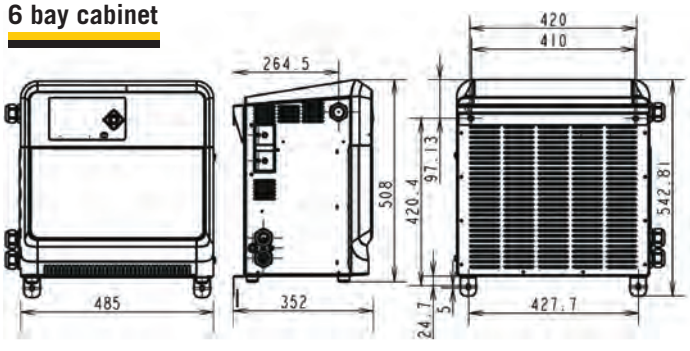

Life iQ™ Modular

MATCHING TABLE OF CAPACITY AND RECHARGE TIME - SINGLE PHASE AND THREE PHASE

Charging Times (+/- 0,5 h) from 80% DOD at 30°C

CHARGING PROFILES													Gel/Evolution (PzV, PzVB)		NXS Blocs	
Slow Charge PzS, PzB, PzM						9 h	10.5 h	12 h								
Heavy duty flooded PzS, PzB			7 h	8 h	9 h								@60% 8 h	@60% 9 h	Charge rate @ 0.7	Charge rate @ 0.2
Standard flooded PzS, PzB, PzM (WL8)			6 h	7 h	8 h								@80% 11 h	@80% 12 h	40% - 80% SOC 0.6 h	40% - 80% SOC 1.25 h
Airmix with PzS, PzB, PzM (WL13)			5.5 h	6.5 h	7.5 h										20% - 100% SOC 4.2 h	20% - 100% SOC 4.7 h
Water Less® 20 PzM									8h	10h	12h					
	Configuration	Volt	C_5Min		C_5Max	C_5Min		C_5Max	C_5Min		C_5Max		C_5Min	C_5Max	C_5Min	C_5Max
SINGLE PHASE																
TC1 LIQ Modular 24V 1kW	Contr POUT**	24	108	189	208	208	245	290	126	142	180		123	165	39	135
	MAX POUT		144	252	277	277	327	387	167	189	240		164	220	51	180
TC1 LIQ Modular 24V 2kW	Contr POUT**		196	343	377	377	445	527	228	258	327		223	300	70	245
	MAX POUT		288	503	554	554	655	774	335	379	480		327	440	103	354
TC1 LIQ Modular 24V 3kW	Contr POUT**		380	664	731	731	864	1022	442	500	633		432	581	136	354
	MAX POUT		432	755	831	831	982	1161	502	568	720		491	661	154	354
TC1 LIQ Modular 36/48V 1kW	Contr POUT**	36	64	112	123	123	145	172	74	84	107		73	98	23	80
	MAX POUT		100	175	192	192	227	269	116	132	167		114	153	36	125
TC1 LIQ Modular 36/48V 2kW	Contr POUT**		136	238	262	262	309	366	158	179	227		155	208	49	170
	MAX POUT		192	336	369	369	436	516	223	253	320		218	294	69	240
TC1 LIQ Modular 36/48V 3kW	Contr POUT**		240	420	462	462	545	645	279	316	400		273	367	86	300
	MAX POUT		300	524	577	577	682	806	349	395	500		341	459	107	354
TC1 LIQ Modular 36/48V 1kW	MAX POUT	48	72	126	138	138	164	194	84	95	120		82	110	26	90
TC1 LIQ Modular 36/48V 2kW	Contr POUT**		98	171	188	188	223	263	114	129	163		111	150	35	123
	MAX POUT		144	252	277	277	327	387	167	189	240		164	220	51	180
TC1 LIQ Modular 36/48V 3kW	Contr POUT**		172	301	331	331	391	462	200	226	287		195	263	61	215
	MAX POUT		216	378	415	415	491	581	251	284	360		245	330	77	270
THREE PHASE																
TC3 LIQ Modular 24/36/48V 3.5kW	MAX POUT	24	280	490	538	538	636	753	326	368	467		318	428	100	350
TC3 LIQ Modular 24/36/48V 7kW	Contr POUT**		384	671	738	738	873	1032	447	505	640		436	587	137	354
	Contr POUT1**		512	895	985	985	1164	1376	595	674	853		582	783	183	354
	MAX POUT		560	979	1077	1077	1273	1505	651	737	933		636	856	200	354
TC3 LIQ Modular 24/36/48V 10.5kW	Contr POUT**		652	1140	1254	1254	1482	1550	758	858	1087		741	997	233	354
	MAX POUT		840	1469	1550				977	1105	1400		955	1120	300	354
TC3 LIQ Modular 24/36/48V 14kW	MAX POUT		1120	1550					1302	1474	1550					
TC3 LIQ Modular 24/36/48V 17.5kW	MAX POUT		1280	1550					1488	1550						
TC3 LIQ Modular 24/36/48V 21kW	MAX POUT		1280	1550					1488	1550						
TC3 LIQ Modular 24/36/48V 3.5kW	MAX POUT	36	260	455	500	500	591	699	302	342	433		295	398	93	325
TC3 LIQ Modular 24/36/48V 7kW	MAX POUT		520	909	1000	1000	1182	1398	605	684	867		591	795	186	354
TC3 LIQ Modular 24/36/48V 10.5kW	MAX POUT		780	1364	1500	1500	1550		907	1026	1300		886	1120	279	354
TC3 LIQ Modular 24/36/48V 14kW	MAX POUT		1040	1550					1209	1368	1550					
TC3 LIQ Modular 24/36/48V 17.5kW	MAX POUT		1280	1550					1488	1550						
TC3 LIQ Modular 24/36/48V 21kW	MAX POUT		1280	1550					1488	1550						
TC3 LIQ Modular 24/36/48V 3.5kW	MAX POUT	48	240	420	462	462	545	645	279	316	400		273	367	86	300
TC3 LIQ Modular 24/36/48V 7kW	Contr POUT**		328	573	631	631	745	882	381	432	547		373	502	117	354
	Contr POUT1**		440	769	846	846	1000	1183	512	579	733		500	673	157	354
	MAX POUT		480	839	923	923	1091	1290	558	632	800		545	734	171	354
TC3 LIQ Modular 24/36/48V 10.5kW	Contr POUT**		560	979	1077	1077	1273	1505	651	737	933		636	856	200	354
	MAX POUT		720	1259	1385	1385	1550		837	947	1200		818	1101	257	354
TC3 LIQ Modular 24/36/48V 14kW	MAX POUT		960	1550					1116	1263	1550		1091	1120	343	354
TC3 LIQ Modular 24/36/48V 17.5kW	MAX POUT		1200	1550					1395	1550						
TC3 LIQ Modular 24/36/48V 21kW	MAX POUT		1280	1550					1488	1550						
TC3 LIQ Modular 72/80V 3.5kW	MAX POUT	72	160	280	308	308	364	430	186	211	267		182	245	57	200
TC3 LIQ Modular 72/80V 7kW	Contr POUT**		240	420	462	462	545	645	279	316	400		273	367	86	300
	MAX POUT		320	559	615	615	727	860	372	421	533		364	489	114	354
TC3 LIQ Modular 72/80V 10.5kW	Contr POUT**		400	699	769	769	909	1075	465	526	667		455	612	143	354
	MAX POUT		480	839	923	923	1091	1290	558	632	800		545	734	171	354
TC3 LIQ Modular 72/80V 14kW	MAX POUT		640	1119	1231	1231	1455	1550	744	842	1067		727	979	229	354
TC3 LIQ Modular 72/80V 17.5kW	MAX POUT		800	1399	1538	1538	1550		930	1053	1333		909	1120	286	354
TC3 LIQ Modular 72/80V 21kW	MAX POUT		960	1550					1116	1263	1550		1091	1120	343	354
TC3 LIQ Modular 72/80V 3.5kW	MAX POUT	80	144	252	277	277	327	387	167	189	240		164	220	51	
TC3 LIQ Modular 72/80V 7kW	MAX POUT		288	503	554	554	655	774	335	379	480		327	440	103	
TC3 LIQ Modular 72/80V 10.5kW	Contr POUT**		360	629	692	692	818	968	419	474	600		409	550	129	
	MAX POUT		432	755	831	831	982	1161	502	568	720		491	661	154	
TC3 LIQ Modular 72/80V 14kW	MAX POUT		576	1007	1108	1108	1309	1548	670	758	960		655	881	206	
TC3 LIQ Modular 72/80V 17.5kW	MAX POUT		720	1259	1385	1385	1550		837	947	1200		818	1101	257	
TC3 LIQ Modular 72/80V 21kW	MAX POUT		864	1510	1550				1005	1137	1440		982	1120	309	

* 3 Bay Cabinet | ** Output currents set at different values to match specific capacities

Life iQ™ Modular

TECHNICAL SPECIFICATION - SINGLE PHASE

Specifications	Units	1kW			2kW		3kW	
Battery voltage		12V	24V	36/48V	24V	36/48V	24V	36/48V
Nominal input voltage	Vac	230V +/- 10% / 1ph						
Frequency	Hz	50/60						
Max current draw @ 230Vac	Aac	2.4	4.8	5.1	9.6	10.2	14.4	15.3
AC input cable section	mm^2	3 x 1.5						
AC input cable length	m	1.5						
Max output current @ 230Vac	Adc	36	36	25/18	72	50/36	108	75/54
Battery cables section	mm^2	25						
Battery cables length	m	3						
IP protection		IP21						
Operating temperature	°C	0°C to +45°C						
Power factor		0.99						
Idle mode	W	≤10						
Display		Multiline TFT						
Weight	kg	6.0			7.0		8.0	
Dimensions (HxWxD)	mm	344 x 250 x 182						
Weight with airmix	kg	9.0			10.0		11.0	
Dimensions (HxWxD) with airmix	mm	435 x 286 x 185						
Cabinet		3 bay (1 module)			3 bay (2 modules)		3 bay (3 modules)	

3 bay cabinet

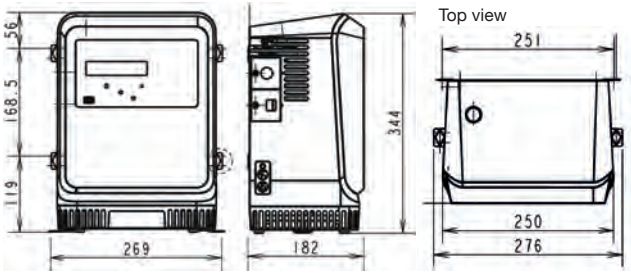

TECHNICAL SPECIFICATION - THREE PHASE

Specifications	Units	3.5kW		7kW		10.5kW		14kW		17.5kW		21kW	
Battery voltage		24/36/48V	72/80V	24/36/48V	72/80V	24/36/48V	72/80V	24/36/48V	72/80V	24/36/48V	72/80V	24/36/48V	72/80V
Nominal input voltage	Vac	400V +/- 10% / 3ph											
Frequency	Hz	50/60											
Max current draw @ 400Vac	Aac	5.6	5.6	11.2	11.2	16.8	16.8	22.4	22.4	28.0	28.0	29.8	33.6
AC input cable section	mm^2	4 x 2.5				4 x 4.0				4 x 6.0			
AC input cable length	m	2											
Max output current @ 400Vac	Adc	70/65/60	40/36	140/130/120	80/72	210/195/180	120/108	280/260/240	160/144	320/320/300	200/180	320/320/320	240/216
Battery cables section	mm^2	35				70				95			
Battery cables length	m	3											
IP protection		IP21											
Operating temperature	°C	0°C to +45°C											
Power factor		0.95											
Idle mode	W	≤10											
Display		Multiline TFT											
Weight	kg	26.0		29.5		33.5		37.0		44.5		48.0	
Dimensions (HxWxD)	mm	508 x 335 x 352								508 x 485 x 352			
Weight with airmix	kg	28.0		31.5		35.5		39.0		46.5		50.0	
Dimensions (HxWxD) with airmix	mm	508 x 335 x 352								508 x 485 x 352			
Cabinet		2 bay (1 module)		2 bay (2 modules)		4 bay (3 modules)		4 bay (4 modules)		6 bay (5 modules)		6 bay (6 modules)	

2 and 4 bay cabinet

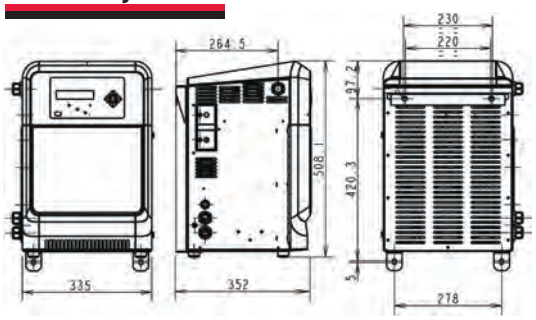

6 bay cabinet

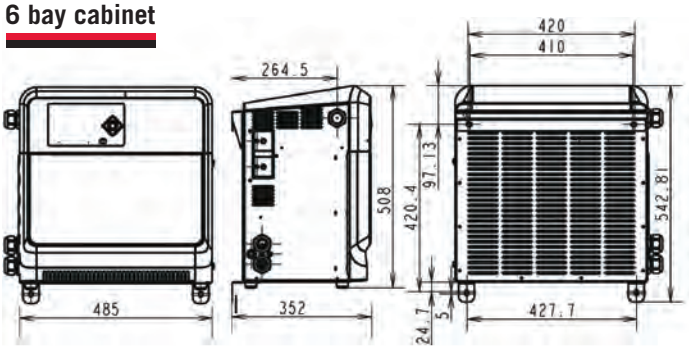

OPTIONS
● available

Option	Description	Lifetech®	Life iQ™	Picture (internal equipment)	Picture (external equipment)
Airmix*	To initiate electrolyte circulation in the battery (what shortens the charge duration)	●	●		
Electrovalve*	To allow to fill the battery with water automatically	●	●		
Remote red and green indicators*	To indicate battery in charge/ available remotely	●	●		
Remote red and green indicators with on/off switch*	To indicate battery in charge/ available and to allow to start/ stop the charge remotely	●	●		
BSI 40™*	Battery Status Indicator to indicate first battery to use (FIFO system)	●	●		
	Additional external LCD display	●	●		
	Additional external alarm	●	●		
Arcless (or pilot contact control or LM/EB)*	To remove arcs in the output plug in case of disconnection during the charge (could be 1 or 2 wire(s) option depending on the battery connection)	●	●		
Ethernet	To connect the charger to a network (wired)		●		
Ethernet WIFI	To connect the charger to a network (wireless)		●		
BFM	To connect the charger to BFM system (wired)		●		
PLC	To connect the charger to a Programmable Logic Controller through relays		●		

*not available on 1 kW stand alone

Slot 1 (upper) is used for electrovalve or airmix connection
Slot 2 (lower) is used for all other option connection
There are no more than two options according to free posts

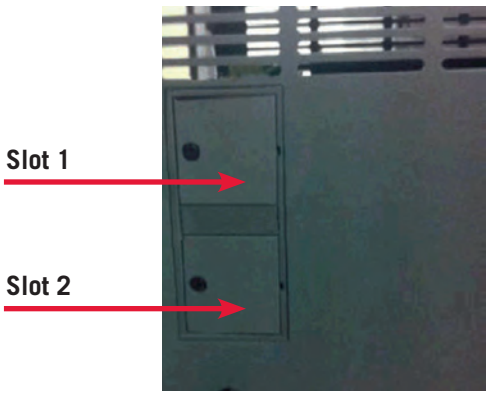

EnerSys®

Power/Full Solutions

EnerSys EMEA
EH Europe GmbH
Baarerstrasse 18
6300 Zug
Switzerland
Phone: +41 44 215 74 10
Fax: +41 44 215 74 11
www.enersys.com



Enersys Ltd
Oak Court
Clifton Business Park
Wynne Avenue
Swinton
Manchester M27 8FF
Phone: 0161 794 4611
Fax: 0161 727 3809

Please refer to the website address for details of your nearest EnerSys® office: www.enersys.com

© 2016 EnerSys. All rights reserved. All trademarks and logos are the property of or licensed to EnerSys and its affiliates unless otherwise noted.

05.2016 - Subject to revisions without prior notice. E&OE