# WHAT ARE ITS
# ADVANTAGES?

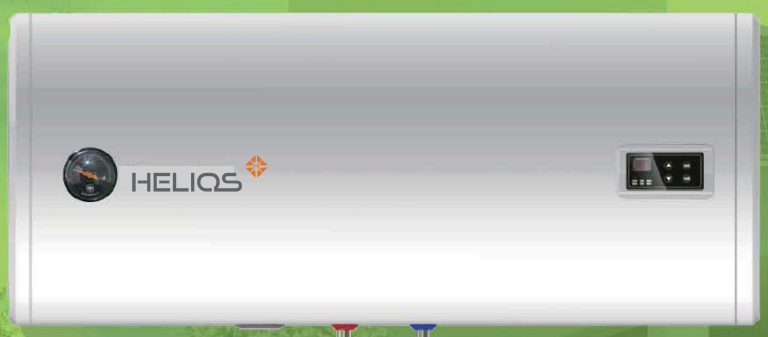


- GO GREEN
- REDUCE YOUR ENERGY BILL
- CONTROL THROUGH THE APP



## Why choose our product?

- Save Money
- Mobile APP Live Control (Optional)
- Save Energy
- No Over-heating
- Power From The Sun
- Frost Resistant

## Product Introduction

- PV and Grid combined heating  hot water,intelligent switching
- *Advanced MPPT solar water heating controller,efficiency>99%
- Hot water output rate >70%
- Easy installation, reducing waterway installation
- Leakage protection and  over temperature protection, safe and reliable

* Wall-hang water heater have No MPPT control.



# Wall-hang Series

## Wall-hang Water Heater

*Manual Heating

*Keep Warm

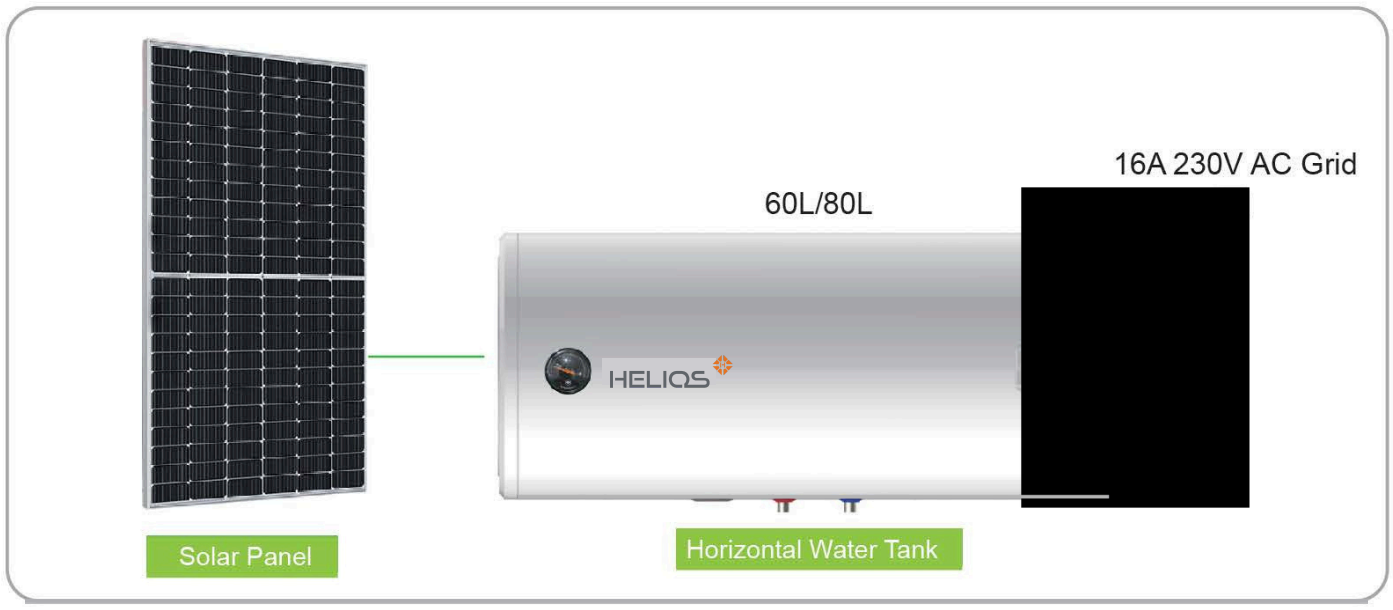


## Operating Mode

**Manual Heating**

When the water tank temperature is below the set temperature, press the "Manual Heating" button to activate the AC heating. The AC heating will stop once the set temperature is reached. This mode is executed only once.

**Keep Warm**

When the water tank temperature is 5 °C below the set temperature, press and hold the "Manual Heating" button to activate the AC heating. The heating will stop once the set temperature is reached. This mode will keep cycling.

* In both modes, the solar energy will continue to heat up until 75 °C.

## Production Configuration




| Model | GW-60-2/0.39-2 | GW-80-2/0.39-2 |
|---|---|---|
| Capacity | 60L | 80L |
| PV Input Data (No MPPT) | | |
| DC Input Power | 550-595W(one set PV panel) | |
| DC Electric heater Data | | |
| DC Rated Power | 42V/390W | |
| DC Rated Voltage | 42V | |
| AC Electric heater Data | | |
| AC Rated Power | 230V/2000W | |
| AC Rated Voltage | 230V | |
| Tank Data | | |
| Temperature Setting Range | 35°C-65°C | |
| ProtectionFunction | Leakage protection Over temperature protection | |
| Inner Liner Laterial | Enamel | |
| Rated pressure | 0.7Mpa | |
| Protection level | IPX4 | |
| Water Tank Size | ϕ468*730mm | ϕ468*920mm |
| Package Size | 525*525*800mm | 525*525*990mm |

HELIOS

# Floor Standing Series

## Floor-Standing PV Water Heater

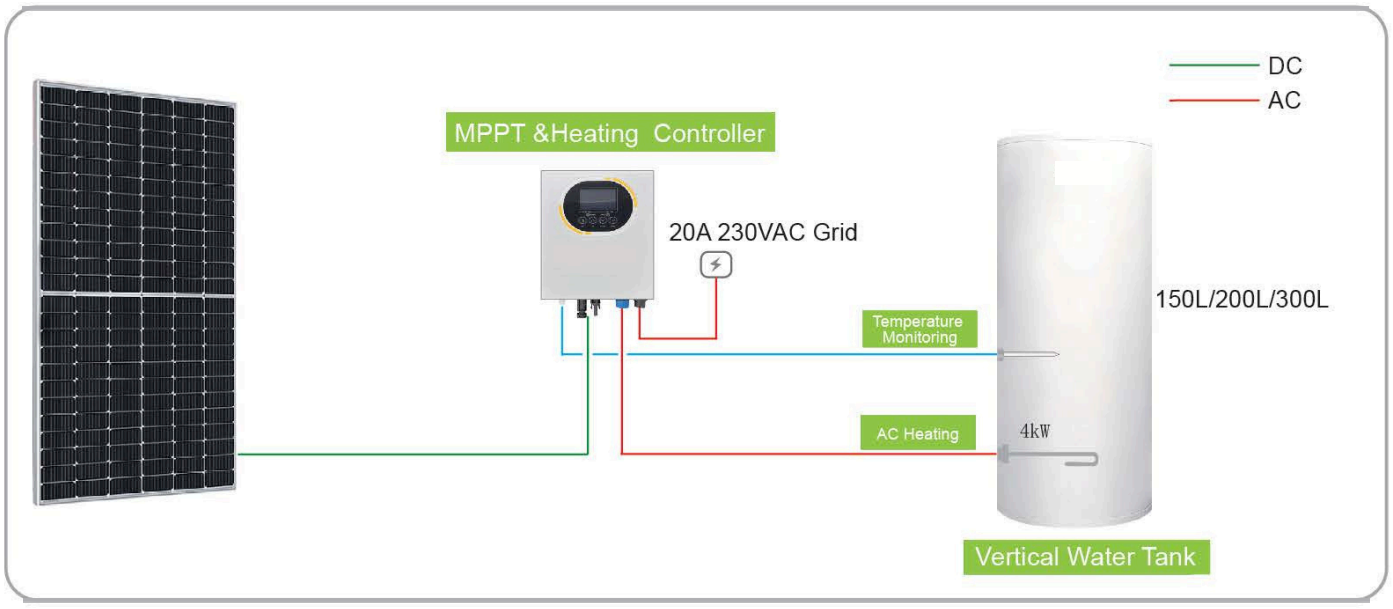


*Timing Heating

*Manual Heating

## Production Configuration




| Model | GL-150-3/4-1 | GL-200-4/4-1 | GL-300-4/4-1 |
|---|---|---|---|
| Capacity | 150L | 200L | 300L |
| PV Input Data | | | |
| Recommend Input Power | 2 set*(550-595)W | 3 set*(550-595)W | 4 set*(550-595)W |
| MPPT Operating Voltage Range | 35 Vdc ~ 150 Vdc | | |
| AC Rated Power | 2000W | | |
| AC Rated Voltage | 220V | | |
| DC Electric heater Data | | | |
| DC Rated Power | 2000W | | |
| DC Rated Voltage | 120V | | |
| Tank Data | | | |
| Inner Liner Laterial | Enamel | | |
| ProtectionFunction | Leakage protection Over temperature protection | | |
| Protection Level | IPX4 | | |
| Rated pressure | 0.7Mpa | | |
| Water Tank Size | ϕ520*1190mm | ϕ520*1540mm | ϕ630*1476mm |
| Package Size | 575*575*1280mm | 575*575*1600mm | 690*690*1530mm |
| Water Tank Weight | 47Kg | 58Kg | 78Kg |

NOTE: Other models of water tanks can be customized according to demand.

sapphire CABIN

CE

Mg ANOD

HELIOS

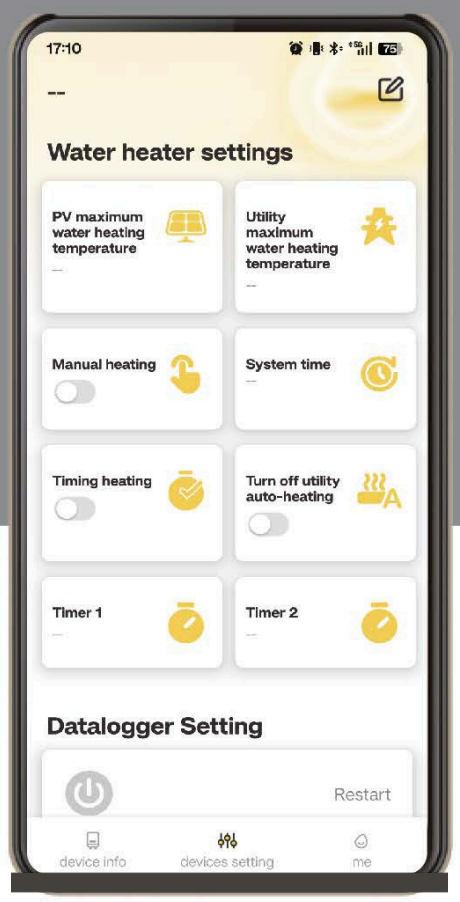


# YEARLY SAVINGS ON YOUR ELECTRICITY

| MPPT Water Heater Controller (Wifi Optional) | | |
|---|---|---|
| PV Max.Input Power | 3000W | 4000W |
| Solar Input Current | ≤15A | ≤ 20A |
| MPPT Efficiency | >99% | |
| AC Grid Rated Voltage | 230VAC | |
| AC Grid Working Voltage | 180~260VAC | |
| AC Load Rated Power | 230V/4000W | |
| AC Load RatedCurrent | ≤20A | |
| Temperature Setting Range | PV heating set :50℃~75℃<br>AC heating set :30℃~75℃ | |
| Dimensions | 258*190*84.5mm | |
| Net Weight | 2.75Kg | |
| Gross Weight | 3.1Kg | |
| Ingress Protection | IP65 | |

## Production Sizes

| Model \ Size | A/F (mm) | B/E (mm) | C (mm) | D (mm) | Packaged size | Loading information 20GP/40HQ |
|---|---|---|---|---|---|---|
| GW-60-2/0.39-2 | 730 | φ468 | 210 | 220 | 52.5*52.5*80 | 116/299 |
| GW-80-2/0.39-2 | 920 | φ468 | 210 | 220 | 52.5*52.5*99 | 88/200 |
| GL-150-3/4-1 | 1190 | φ520 | 210 | 220 | 57.5*57.5*128 | 40/160 |
| GL-200-4/4-1 | 1540 | φ520 | 210 | 220 | 57.5*57.5*160 | 40/80 |
| GL-300-4/4-1 | 1476 | φ630 | 210 | 220 | 69*69*153 | 24/51 |

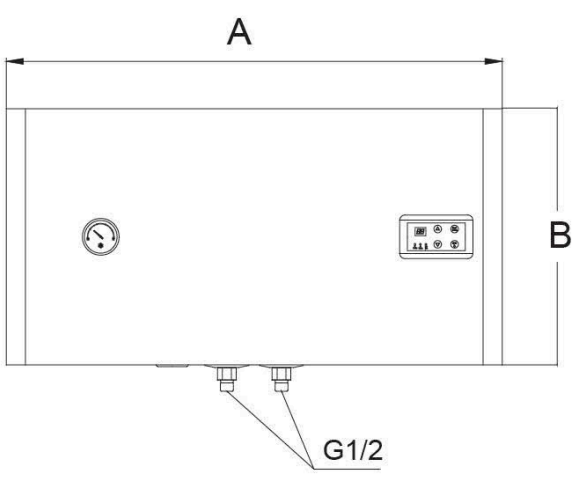


Wall-mounted water tank（60L/80L）

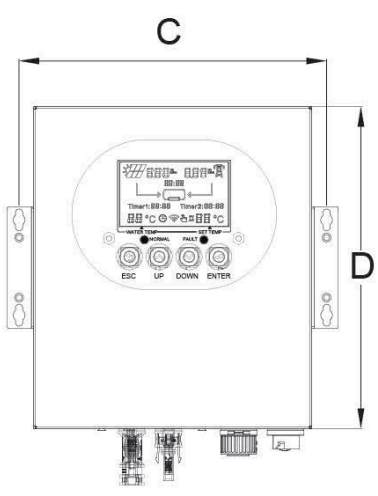


MPPT Heating Controller

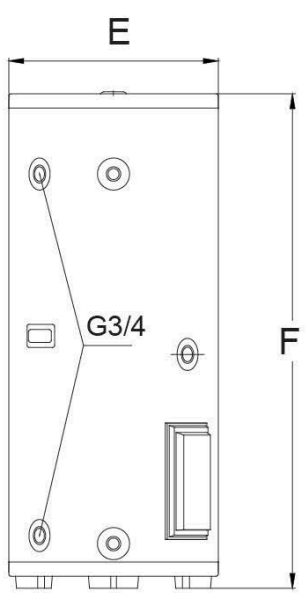


Floor-standing water tank (150L/200L/300L)

HELIOS