TMLiF-7230S1(73.6V30Ah)Battery Pack Specification

Changelogs

Version- 0.0 2023-04-28

- New issue

1. Cell Specifications

LFP 3.2V Cylindric Cell	
Nominal Voltage	3.2V
Nominal Capacity	15Ah
Voltage range	2.1~3.75V
Weight	~300g
Energy Density	~160Wh/kg
Life Cycle	≥2000 cycles at 25℃, 0.5C/0.5C,100% DOD，EOL 80%

2. Module Specifications

Module 1 23S2P	Nominal Voltage (V)	73.6
	Nominal Capacity(Ah)	30

3.Battery System Specifications

Name	Specifications	Remarks
Battery Type	LFP Battery	
Nominal Voltage (V)	73.6	
Nominal Capacity (Ah)	30	
Battery Configuration	23S2P	
Operating Voltage (V)	48.3~86.25	Single Cell Voltage: 2.1v ~3.75V
Operating Temperature (℃)	Charging: 0℃~45 ℃ Discharging: -20℃~60℃	The working efficiency drops below 10 ℃
Storage Temperature(℃)	0 ~ 45℃ (3 months) -10 ~ 25℃(6 months) ≤70%RH	The battery with BMS is charged once every three months
Rated Storage Energy (Wh)	2208	
Standard Charging Rate (A)	15	

Maximum Continuous Charging Rate (A)	15	
Standard Discharge Rate (A)	15	
Maximum Continuous Discharge Rate(A)	50	
Peak Discharge Current(A)	90A, ≤10s	
Cycle Life	≥1500 cycles	at 25℃, 0.5C,100% DOD,
Net Weight （kg）	~19.65	
Dimensions (mm)	220*160*333mm (±2mm)	Length * Width * Height, including handles
IP Protection Standards	IP54	
Factory Default SOC	30%	
Housing Material	Cold Rolled Steel	
Cool down Method	Self-cool down	
Communication Protocol	/	Can be customized
Main communication plug-in port	/	Can be customized
Display plug-in port	/	Can be customized
Charge port	Common port, Chogori 24305636-05 with waterproof cover	Matching the terminal wire with 300mm, and the other wire end is bare.
Discharge port		
BMS	JBD	Hardware, no communication
Charging high temperature protection value	85±5℃	
Charging high temperature protection release value	60±5℃	
Discharging high temperature protection value	85±5℃	Discharge temperature protection release conditions: Disconnect the load or charge
Discharging high temperature protection release value	60±5℃	

4. Battery Drawing Solution

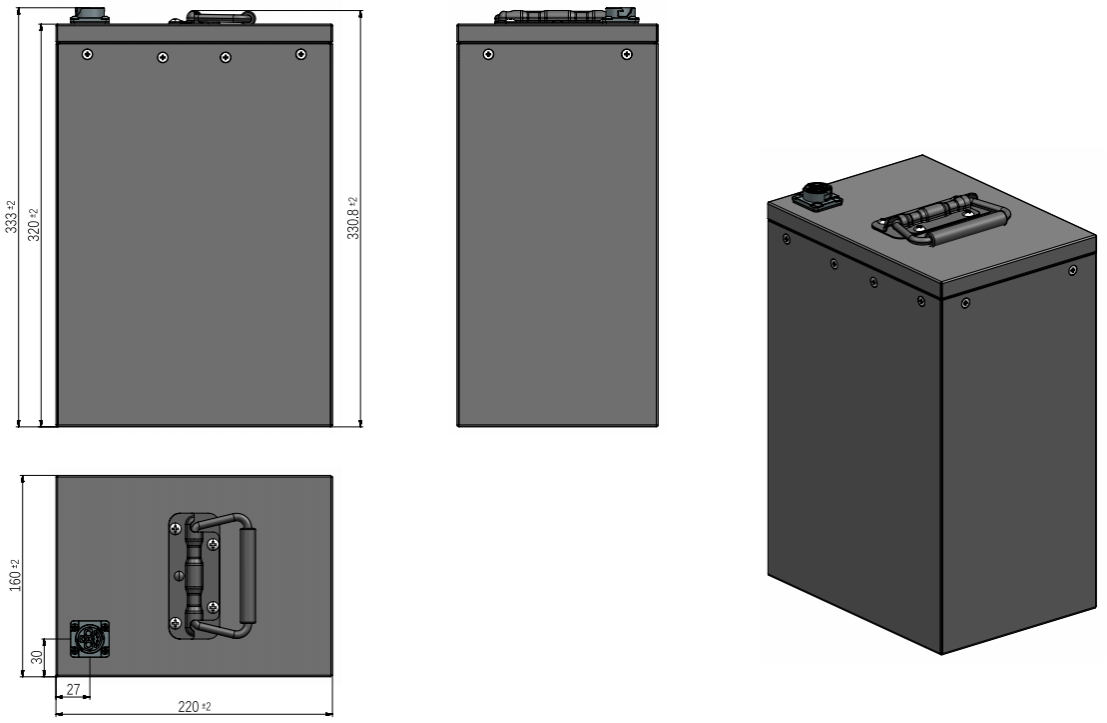

5.Interface definition

(1) Charge & discharge port

the outgoing line is 300mm

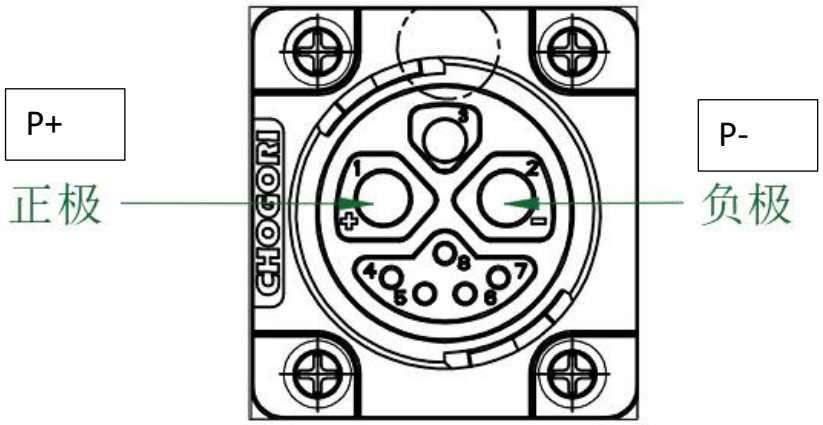

Picture of physical port with waterproof cover：

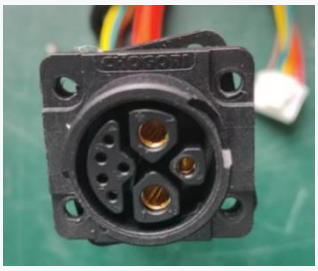



6. Parameter setting

/

7. Schematic diagram of circuit system

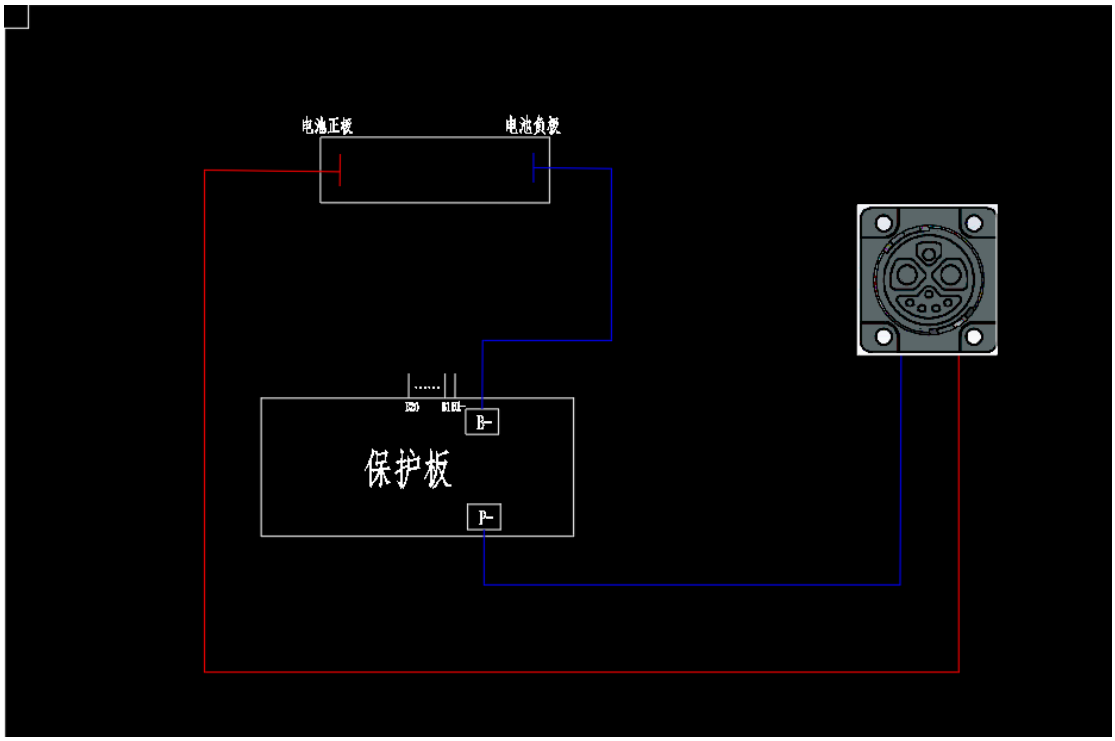

8. BMS Communication Protocol

no communication

功能Feature	测试项目Test item	规格specification			单位 unit
		最小值 Minimum value	典型值 Typical value	最大值 Maximum value	
工作电压Operating voltage	电压范围Voltage range	48.3		86.25	V
工作电流Working current	充电电流 Charging current	--	--	15	A
	放电电流 Discharge current	--	--	50	A
充电保护Charge protection	充电器电压（CC-CV)Charger voltage			86.25	V
	Charge protection voltage	3.700	3.750	3.800	V
	Charging protection delay time	500	1000	1500	mS
	Overcharge protection restore voltage	3.550	3.600	3.650	V
放电保护 Discharge protection	Overdischarge protection voltage	2.000	2.100	2.200	V
	Overdischarge protection delay time	50	100	200	mS
	Overdischarge protection restore voltage	2.200	2.300	2.400	V
	Overshoot protection recovery condition	断开负载或者充电Disconnect the load or charge			
短路保护 Short circuit protection	Short circuit protection delay time	100	200	300	uS
	Short-circuit protection recovery	Disconnect the load or charge			
温度保护(内置) Temperature protection	Minimum temperature protection value		-20		℃
	Maximum temperature protection value	85			℃