Solar Charge Controller

User Manual



ET5420NC G3
ET7420NC G3
ET10420NC G3

EN

Contents

Important Safety Instructions **1**

Disclaimers **3**

1 General Information **4**

1.1 Overview 4
1.2 Appearance 6
1.3 Naming rules 11
1.4 System wiring diagram 11

2 Installation **13**

2.1 Attention 13
2.2 Requirements for the PV array 13
2.3 Cable specifications 14
2.4 Controller installation 15
2.5 Controller connection 17
2.6 Power on the controller 22

3 Interface **23**

3.1 Indicator 23
3.2 Buttons 24
3.3 LCD 25
3.4 Browsing real-time data 25
3.4.1 PV 25
3.4.2 Battery 26
3.5 Parameters setting 27
3.5.1 Parameters 28
3.5.2 Battery voltage control parameters 36
3.5.3 Control strategy under lithium battery protocol 40
3.5.4 Setting parameters remotely 41

4 Others **43**

4.1 Protections 43

4.2 Troubleshooting 45
4.3 Maintenance 49

5 Specifications 50

6 Appendixes 54

6.1 Appendix 1 Dimensions 54
6.2 Appendix 2 Index of Abbreviations 57

Important Safety Instructions

Please keep this manual for future reference.

This manual contains safety, installation and operation instructions for the ET-NC G3 series solar charge controller (hereinafter referred to as "controller" in this manual).

- Read all the instructions and warnings carefully in the manual before installation.
- No user-serviceable components inside the controller, do not attempt to disassemble or repair the controller.
- Install the controller indoors to avoid component exposure and water ingress.
- Install the controller in a well-ventilated place, the heat sink temperature will be very high during operation.
- Do not install the controller in the humid, salt spray, corrosive, greasy, flammable, explosive, dust accumulative or other harsh environments.
- It is recommended to install the proper fast-acting fuses/breakers externally.
- Disconnect PV array connections and the battery fast-acting fuse/breakers before controller installation and adjustment.
- Check whether the wiring is tight to avoid the danger caused by heat accumulation due to loose connection.
- The entire system should be installed and operated by professional personnel!

Symbols explanation

- To ensure the user's personal and property safety while using this product, relevant information is provided the manual and highlighted with the following symbols.
- Please read the relevant texts carefully when you encounter the following symbols in the manual.

Symbol	Definition
Tip:	Indicates recommendation for reference.
	**IMPORTANT:** Indicates an important reminder during the operation, failure to do so may result in an equipment error alarm.
	**CAUTION:** Indicates a potential risk which, if not avoided, could result in equipment damage.
	**WARNING:** Indicate a risk of electric shock, if not avoided, will result in damage to equipment or electric shock/injury to personnel.

	**WARNING HOT SURFACE:** Indicate a danger caused by high temperature, if not avoided, may cause burns to personnel.
	Read the user manual carefully before any operation.

Disclaimers

The warranty does not apply to the following conditions:

- Damage caused by improper use or inappropriate environments (It is strictly forbidden to install the controller in the humid, salt spray, corrosive, greasy, flammable, explosive, dust accumulative or other harsh environments).
- The actual current/voltage/power exceeds the limit value of the controller.
- Damage caused by operating temperature exceeding the rated temperature range.
- Electric arc, fire, explosion and other accidents caused by failure to follow controller labels or manual instructions.
- Unauthorized disassembly and maintenance of the controller.
- Damage caused by force majeure such as lightning strikes, rainstorms, mountain torrents and utility failures.
- Damage occurred during transportation or loading/unloading the controller.

1 General Information

1.1 Overview

ET-NC G3 series incorporates a new design concept, with solar charge controller as the main body.

With a brand new generation of MPPT control algorithm, it significantly improves the tracking and response speed of maximum power point. Minimizing the loss rate and time of the maximum power point guarantees the maximum power point tracking efficiency, response speed and DC/DC conversion efficiency in high and low power bands. It can track the maximum power point of the PV arrays in various sunlight conditions and capture the energy from the solar panels.

With independent voltage stabilization, the battery terminal of the controller can be directly connected to the load when there is no battery. It is compatible with various lithium batteries more friendly and comprehensively. Excellent low-power design that significantly reduces static power consumption and extends system standby time.

With the functions such as the charging current limit, charging power limit and automatic reduction of charging power at high temperature, it can ensure the system stability when it is connected to the excess PV modules and operating at high temperature.

The controller adopts waterproof and dustproof design with IP32 protection level, up to IP43 with optional white terminal cover. It has short-circuit protection and isolated RS485 communication interface that can be connected with optional WiFi, Bluetooth, TCP, 4G and other modules to achieve remote monitoring. The communication port can be set to enable (with power output and communication) or disable (no power output, no communication) according to actual needs, and the static power consumption can be further reduced when communication is disabled.

Self-adaptive three-stage charging mode can effectively extend the service life of battery and significantly improve the system performance. It also has comprehensive electronic protections for overcharge, overdischarge and PV/battery reverse polarity etc, to ensure the safety, stability and long-lasting operation of the solar system. It supports up to 6 controllers for parallel charging, which is convenient for system capacity expansion and suitable for different monitoring needs. The controller can be widely used for RV, ship, multiple industrial monitoring, small and medium-sized solar power supply systems and other fields.

Features

- Low power consumption with static loss less than 50mA
- Independent voltage stabilization
- Advanced MPPT technology, with maximum tracking efficiency not less than 99.5%
- Supporting two PV inputs to improve PV utilization①
- Conversion efficiency up to 98.5%
- Supporting multiple battery types, including lithium batteries
- Stable self-activation for lithium batteries
- Supporting local setting of main control parameters
- RS485 communication interface, connected with optional WiFi, Bluetooth, TCP, 4G and other modules for remote monitoring
- Dual limits for rated charging power and charging current
- Automatic power reduction when charging at high temperature
- Comprehensive electronic protections
- Protection level IP32, up to IP43 with white terminal cover
- Built-in independent BMS communication port
- Built-in CAN parallel communication port
- Real-time data logging, event logging and energy statistics
- Remote switch control, easy to turn on/off
- Dry contact output to turn on/off the oil generator
- All metal die-casting shell
- Compliant with IEC62109, UL1741, EMC (Class B) and other relevant standards

① Two PV inputs are only supported by ET10420NC G3.

1.2 Appearance

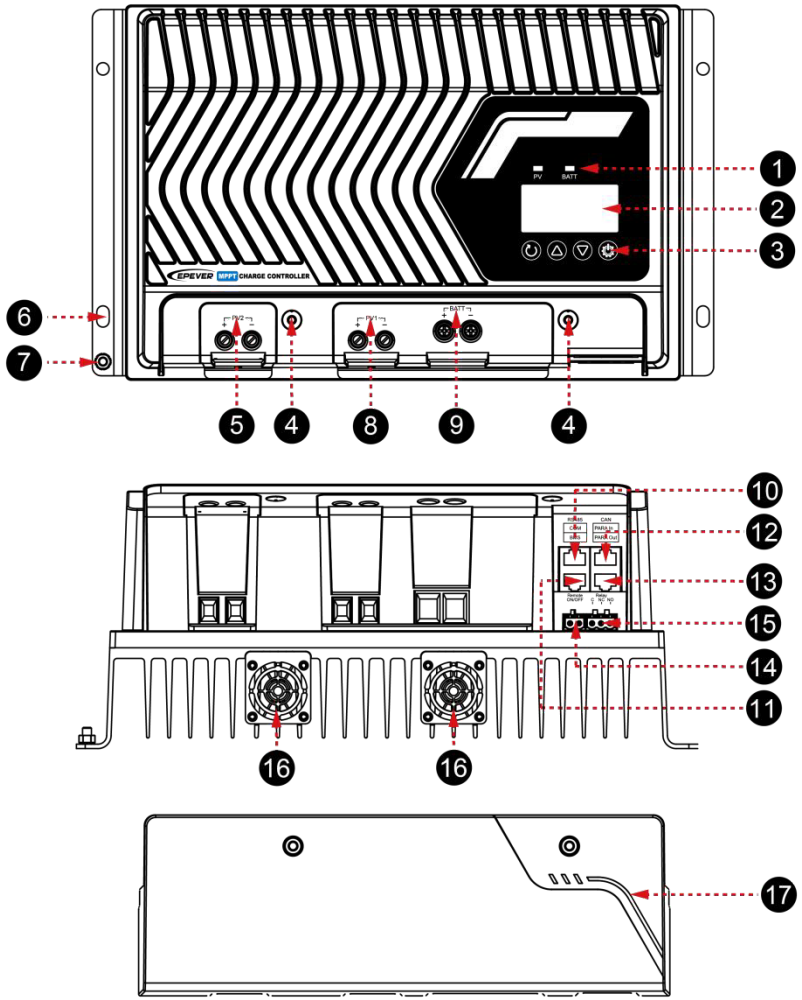

Figure 1 Product Appearance

❶	Indicator (see Chapter 3.1 Indicator)	❿	COM: RS485 COM port (RJ45, with isolation design, 5VDC/200mA)(2)
❷	LCD (see Chapter 3.3 LCD)	⓫	RTS/BMS COM interface(3)
❸	Buttons (see Chapter 3.2 Buttons)	⓬	CAN-PARA In: Parallel COM input port for multiple controllers (RJ45, with isolation design)(4)
❹	Protective cover hole (M4)	⓭	CAN-PARA Out: Parallel COM output port for multiple controllers (RJ45, with isolation design)(4)
❺	PV2 terminals(1)	⓮	Charge Enable(5)
❻	Mounting hole*4	⓯	Dry contact port (Oil generator/Utility)(6)
❼	Grounding terminal	⓰	Cooling fan(7)
❽	PV1 terminals(1)	⓱	White Terminal Cover (Optional)
❾	Battery terminals(1)		

(1) The controller is of common negative design, where the negative terminals of PV array and battery are the same negative grounding terminals.

(2) Connect optional WiFi, Bluetooth, TCP and 4G modules to the RS485 COM port for remote monitoring. The pins of the RS485 COM port (RJ45) are defined as follows:

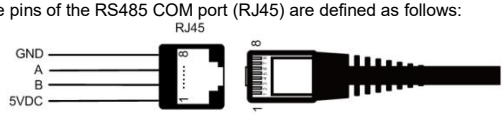

Pin	Definition	Pin	Definition
1	+5VDC	5	RS485-A
2	+5VDC	6	RS485-A
3	RS485-B	7	GND
4	RS485-B	8	GND

(3) When the system uses lithium batteries with BMS function, connect the BMS-Link module and lithium batteries through the port ⓬; with the setting of the BMS protocol number, the BMS-Link module can convert the BMS protocols of different lithium battery manufacturers into our standard protocols to realize the communication between the controller and lithium batteries BMS of different manufacturers. When using the Pylon batteries with BMS protocol number of 21, and the Epever batteries with BMS protocol number of 10, 27 or 34, you can connect the batteries directly to port ⓬ by removing the BMS-Link module, and set the BMS protocol number accordingly for BMS communication. **Note: Pylon lithium battery communication cable (CC-RJ45-RJ45-PYLON-200) or Epever lithium battery communication cable (CC-RJ45-RJ45-150) is required for this operation.**

When the system has no BMS function, it is required to set the “BPRO (BMS protocol number)” as 32, connect a remote temperature sensor (model: RTS-D47K) through port ⓬ to detect the battery

temperature, sampling distance ≤ 20 meters. The pin definitions for port ⓬ are the same as those for the RS485 COM port ⓫, see note (2) above.

Tip:	For currently supported BMS manufacturers and corresponding protocols, please go to the EPEVER website to view or download.
CAUTION	If the remote temperature sensor is not connected to the controller, the default temperature for battery charging is 25°C without temperature compensation.

(4) The pins of the parallel COM port for multiple controllers are defined as follows:

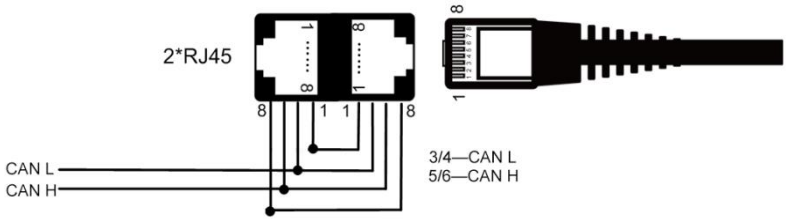

(5) The “Charge Enable Switch” is the terminal with silkscreen of “Remote ON/OFF”, which can control PV normal charging. It is set as “Enable” by factory default (i.e PV is charging normally), if the included 2P terminals are removed from the controller, there is PV charging error.

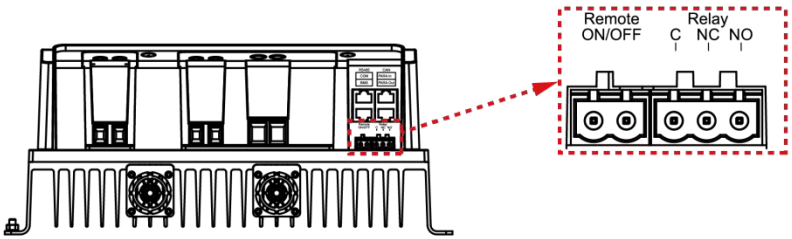

CAUTION	When the“CPE (COM Port Enable)”is set to “ON (Enable)”, the charge enable switch is valid; when it is set to “OFF (Disable)”, the charge enable switch is invalid. For instructions on CPE settings, please refer to 3.5.1 Local parameters list. **Note: When the charge enable switch is valid and the included 2P terminals are connected to the controller, the controller is charging the battery; if the 2P terminals are removed from the controller, the controller stops charging the battery; when the charge enable switch is invalid, the controller is charging the battery by default no matter the 2P terminals are connected to or removed from the controller.**

(6) The dry contact port (Oil generator/Utility) is as shown in the figure above with the "Relay" printed on it, where “C” is the common terminal, “NC” is the normally closed contact, and “NO” is the normally

open contact. **Note: To use only“NO”, or both“NC” and “NO” is subject to the actual control demand of the oil generator when adding the oil generator or there is utility charging in the system.**

- ✧ **Power supply parameters applicable to the dry contact port (Oil generator/Utility)**

  Rated value: 5A/30VDC

  Maximum value: 0.5A/60VDC

- ✧ **Control voltage of dry contact port (Oil generator/Utility)**

  Generator/Utility ON Voltage (V_{ON})=Undervoltage Alarm Voltage minus 0.1V

  Generator/Utility OFF (V_{OFF})=Undervoltage Alarm Recovery Voltage

  Battery Voltage (VBAT)

- ✦ **Power on the generator/utility**

  When $V_{BAT} < V_{ON}$, the “NO (Normally Open)” contact is connected, while the “NC (Normally Closed)” contact is disconnected.

- ✦ **Shut down the generator/utility**

  When $V_{BAT} > V_{OFF}$, the “NO (Normally Open)” contact is disconnected, while the “NC (Normally Closed)” contact is connected.

CAUTION	The V_{ON} and V_{OFF} can be set via the PC software. For the battery voltage control parameters, please refer to Chapter 3.5.2 Battery voltage control parameters. **Note: To use only“NO” or both“NC” and “NO” is subject to the actual control demand of the oil generator.**

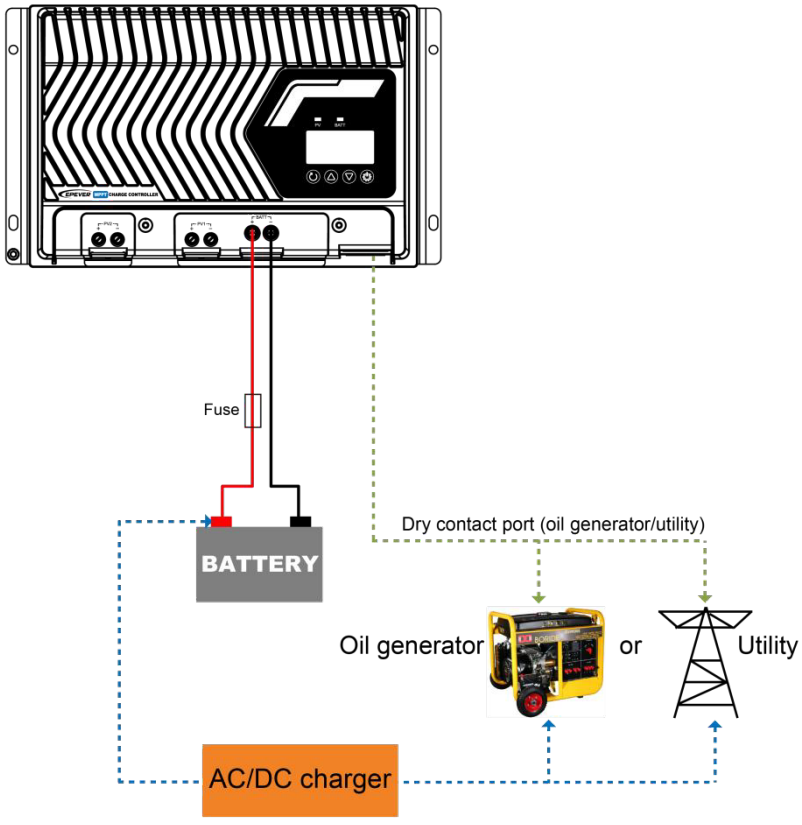

Note: It is not mandatory to connect the oil generator or utility, you can connect them according to your actual needs.

(7) Not all the models are equipped with fans, please refer to the actual product. Only ET10420NC G3 is equipped with fans.

1.3 Naming rules

- **Naming rule for series IT-NC G3**

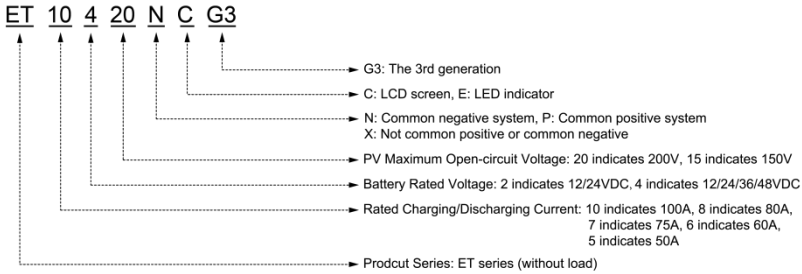

1.4 System wiring diagram

- **No battery mode**

WARNING	When there is no battery, ET-NC G3 series controller can be connected to the inverter directly. The inverter must be connected to the battery terminals of the controller and meet the following conditions at the same time. 1)When connecting a high-frequency inverter: PV input power > (load output power ÷ inverter conversion efficiency ÷ controller conversion efficiency). 2) When connecting an industrial frequency inverter: PV input power > (load output power ÷ inverter conversion efficiency ÷ controller conversion efficiency) × 2.

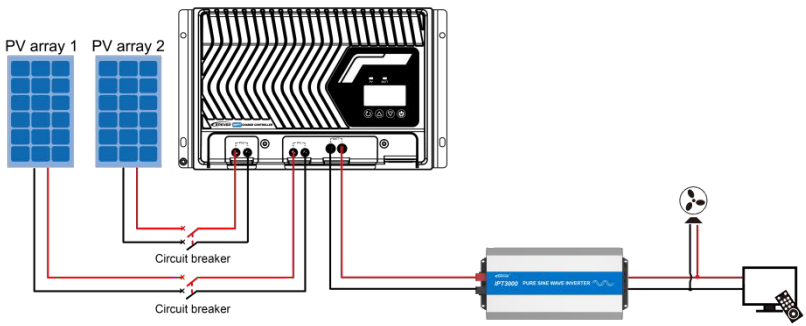

- **Battery mode**

WARNING	In a system with battery connected, if you need to connect an inverter, please connect the inverter directly to the battery pack.

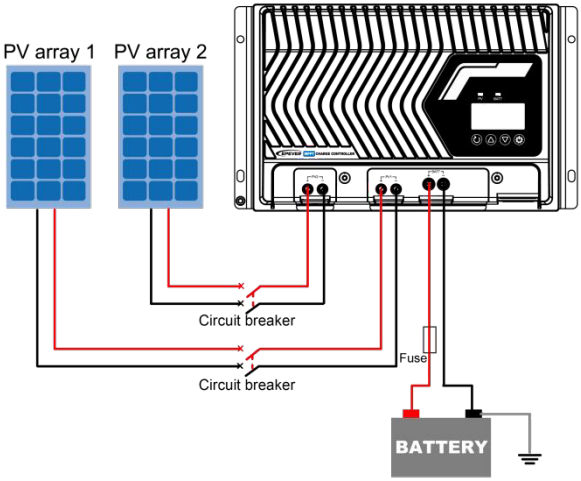

CAUTION	• Ensure that the length of battery connection cable is less than 3 meters. • Ensure that the length of communication cable is less than 3 meters. • It is recommended that the length of the PV connection cable is less than 3 meters **(Note: If the length of the PV connection cable is less than 3 meters, it meets the requirements of EN/IEC61000-6-3 standard; If the length of the PV connection cable exceeds 3 meters, it may not meet the requirements of the EN/IEC61000-6-3 standard).**

2 Installation

2.1 Attention

- Be careful when installing the batteries. Wear protective goggles when installing flooded lead-acid batteries, and rinse with clean water in time once in contact with battery acid.
- The battery and PV connections must be guarded against with inadvertent contact. Install the solar charge controller in an enclosure or install the optional white terminal cover.
- Keep the battery away from any metal objects to prevent battery short circuit.
- Acidic gases may be generated when charging the battery, ensure that the environment is well ventilated.
- Avoid direct sunlight and rain infiltration for outdoor installation.
- Do not install the controller in the humid, salt spray, corrosive, greasy, flammable, explosive, dust accumulative or other harsh environments.
- Loose power connections and corroded cables may result in high heat, melting cables insulation, burning surrounding materials, or even causing a fire. Ensure tight connections and secure cables with cable ties to prevent them from swaying while moving the controller.
- Charge the lead-acid and lithium-ion batteries that are within the control range of this controller only.
- The battery terminals on the controller can be connected to either the same battery or a group of batteries. The following instructions in the manual are for use with a single battery, but they are also applicable to a system with a group of batteries.
- Select the system connection cables according to the current density no greater than 5A/mm^2.
- The stripped length for wiring should not be too long, and the exposed metal part of the wire should not protrude from the metal part of the terminal block.
- Please refer to IEC62109 for the cross-sectional area of the grounding wire, which should not be less than 4mm^2.
- The torque for tightening the wiring screws should be not less than 1.2N.m.

2.2 Requirements for the PV array

Serial connection (string) of PV modules

Due to the different types of PV modules on the market, and as an important part of the PV system, it is essential for the controller to suit various types of PV modules and to maximize the conversion of solar energy into electricity. According to the open-circuit voltage (V_{OC}) and the maximum power point voltage (V_{MPP}) of the MPPT controller, the suitable serial connection for different PV modules can be calculated. The following PV module series connection table is for reference only.

- **ET5420/7420/10420NC G3:**

Battery Voltage / PV Specifications	36-cell Voc < 23V		48-cell Voc < 31V		54-cell Voc < 34V		60-cell Voc < 38V	
	Max.	Best	Max.	Best	Max.	Best	Max.	Best
12V	4	2	3	2	2	2	2	2
24V	6	3	4	2	4	2	3	2
48V	8	5	5	4	5	3	4	3

Battery Voltage / PV Specifications	72-cell Voc < 46V		96-cell Voc < 62V		Thin-film module Voc > 80V
	Max.	Best	Max.	Best	
12V	2	1	1	1	1
24V	3	2	2	1	1
48V	4	3	2	2	2

IMPORTANT	The above parameters are calculated under the STC (Standard Test Condition)—temperature at 25℃, air mass 1.5, irradiance 1000W/m^2.

2.3 Cable specifications

The wiring and installation methods must conform to the national and local electrical code requirements.

- **PV array wiring specifications**

Since the PV array output current varies according to the PV module's type, connection method and sunlight angle, the minimum PV cable specifications can be calculated by the PV Isc (short circuit current). For details, please refer to the short-circuit current value in the PV module specifications sheet (the short-circuit current remains unchanged when PV modules are connected in series; when connected in parallel, the short-circuit current is the sum of the short-circuit currents of the parallel modules). The PV array's I_{SC} must not exceed the controller's maximum PV input current. For controller's maximum PV input current and maximum PV cable specifications, please refer to the table below.

Model	Maximum PV Input Current	Maximum PV Cable Specifications
ET5420NC G3	50A	16mm^2/6AWG
ET7420NC G3	75A	25mm^2/4AWG
ET10420NC G3	100A	35mm^2/2AWG

CAUTION	• When the PV modules connect in series at the lowest temperature, the total voltage must not exceed the controller's maximum PV open circuit voltage 200V(ET**20NC G3). • When the PV modules connect in series at 25℃, the total voltage must not exceed the controller's maximum PV open circuit voltage 180V (ET**20NC G3).

- **Battery cable specifications**

Battery cable specifications should be selected according rated current, please refer to the table below for wiring specifications.

Model	Rated Charging Current	Battery Cable Specifications
ET5420NC G3	50A	16mm²/6AWG
ET7420NC G3	75A	25mm²/4AWG
ET10420NC G3	100A	35mm²/2AWG

CAUTION	• The cable specification is only for reference. If there is a long distance between the PV array and the controller or between the controller and the battery, thicker cables can be used to reduce the voltage drop and improve system performance. • For the battery, the recommended cable specification is selected according to the conditions that its terminals are not connected to any additional inverter.

2.4 Controller installation

WARNING	• Risk of explosion! Never install the controller in the enclosed space with flooded batteries! Do not install it in a confined area where battery gas can accumulate either. • Risk of high voltage! The PV array may generate a very high open circuit voltage. Disconnect the circuit breaker or fast-acting fuse first and be careful when wiring. • Controller of series IT-NC G3 / IT-NC G3 BLE has no battery reverse protection. Do not reverse the battery wiring. Otherwise, the controller may be damaged.
CAUTION	When installing the controller, ensure that there is enough air flow through the controller's heat sink, and leave at least 150mm of clearance above and below the controller to guarantee natural convection for heat dissipation. If the controller is mounted in a closed cabinet, ensure that heat can be dissipated through the cabinet.

Step 1: Determine the installation position and heat-dissipation space

When installing the controller, ensure that there is enough air flow through the controller's heat sink, and leave at least 150mm of clearance above and below the controller to guarantee natural convection for heat dissipation. Please refer to “Figure 2-1: Installation diagram (IP43)” or “Figure 2-2: Installation

diagram (IP32)".

CAUTION	If the controller is mounted in a closed cabinet, ensure that heat can be dissipated through the cabinet.

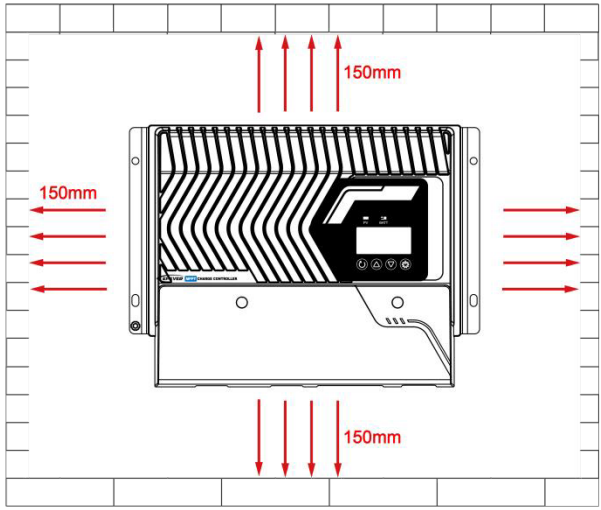

Figure 2-1: Installation diagram (IP43)

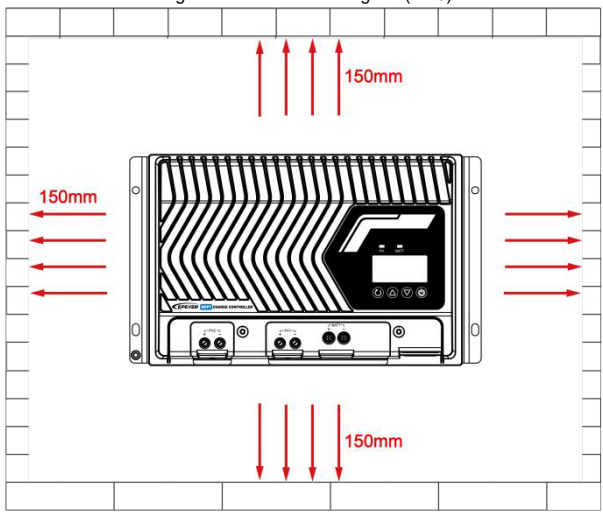

Figure 2-2: Installation diagram (IP32)

Step 2: Remove the terminal cover

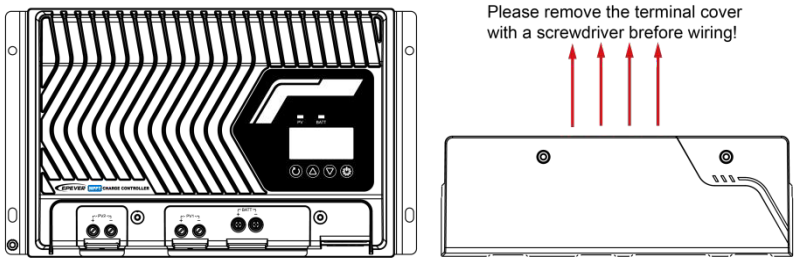

Figure 2-3: Remove the terminal cover (IP43)

2.5 Controller connection

Connect the controller in the sequence of "❶Ground > ❷Battery > ❸Load > ❹ PV array > ❺ Communication modules", and disconnect the controller wiring in the reverse order of Figure 2-4.

The following wiring diagram is illustrated with the appearance of "ET10420NC G3". Please refer to the actual terminals position for correct wiring of other models.

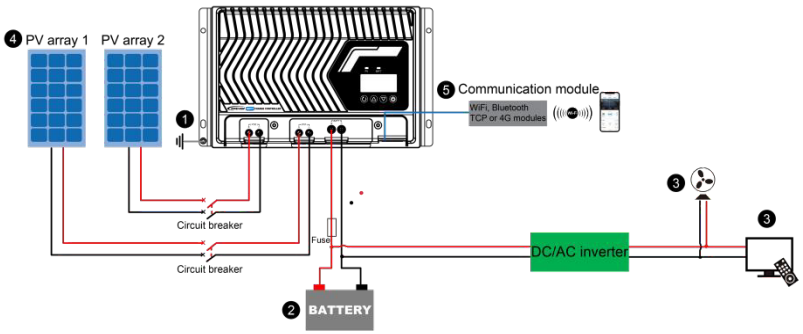

Figure 2-4: Wiring diagram

Note: In addition to supporting stand-alone applications, the ET-NC G3 series series also support the parallel operation of multiple controllers of the same model (up to 6 units). The wiring diagram of multiple controllers is as follows. For instructions on parallel wiring of multiple controllers, please refer to the *controller parallel operation manual*.

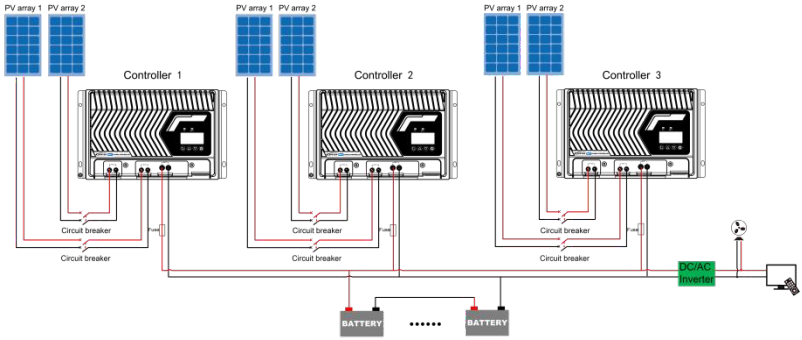

Figure 2-5: Parallel wiring diagram of multiple controllers

(1) Grounding

ET-NC G3 series is common negative controller. Negative terminals of the PV array and battery can be grounded simultaneously, or any negative terminal is grounded.

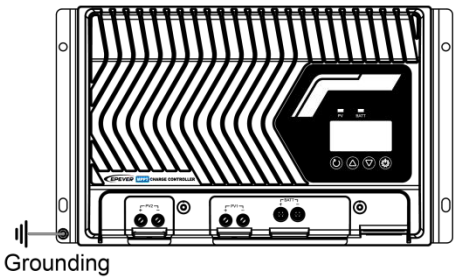

CAUTION	• However, according to the actual application, the negative terminals of the PV array, battery can also be ungrounded. Still, the grounding terminal on the shell must be grounded to effectively shield the external electromagnetic interference and to avoid the electric shock to the human body caused by the live shell. • For common-negative systems, such as the RV system, it is recommended to use a common-negative controller. If a common-positive controller is used and the positive electrode is grounded in the common-negative system, the controller may be damaged.

(2) Battery connection

WARNING	The protection is triggered if there is only battery connection reversed, but don't reverse the battery connection if the PV is connected correctly, which may damage the controller.

CAUTION	• Do not connect the circuit breaker or fast-acting fuse when wiring and ensure that the leads of "+" and "-" poles are connected correctly. • A fast-acting fuse whose current is 1.25 to 2 times the controller's rated current must be installed on the battery side with a distance from the battery no longer than 150 mm. • Please connect the inverter directly to the battery when connecting inverter in the system.

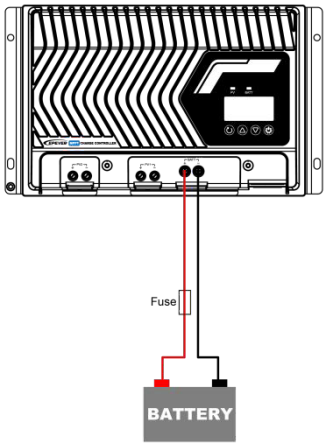

(3) PV modules connection

WARNING	Risk of high voltage! The PV array can generate very high voltage, disconnect the circuit breaker before wiring, and ensure that the leads of "+" and "-" poles are connected correctly.
CAUTION	If controller is used in an area with frequent lightning strikes, an external surge arrester must be installed at the PV input and utility input terminals.

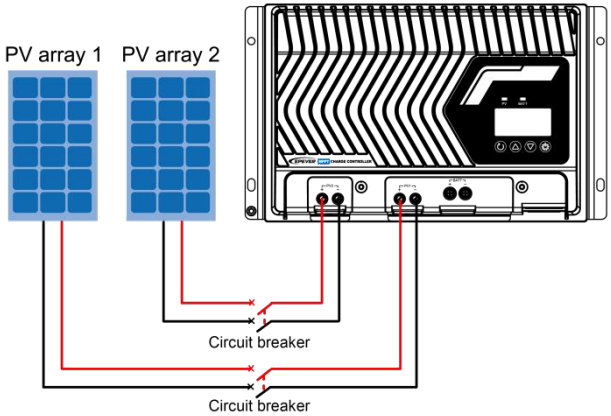

(4) Connect optional accessories

- **Connect the BMS-Link module**

When the system uses lithium batteries with BMS function, connect the BMS-Link module and lithium batteries through the port ⓬; with the setting of the BMS protocol number, the BMS-Link module can convert the BMS protocols of different lithium battery manufacturers into our standard protocols to realize the communication between the controller and lithium batteries BMS of different manufacturers.

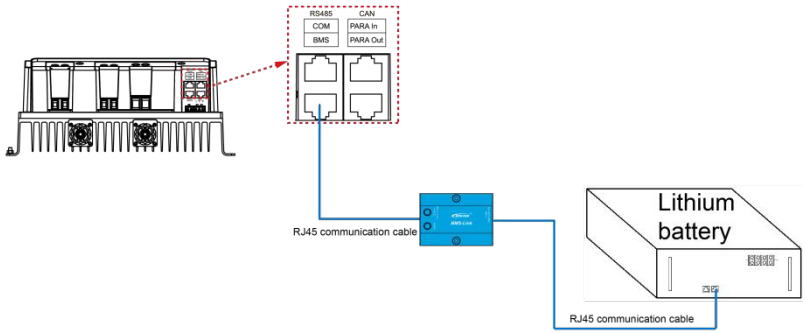

- **Connect the remote temperature sensor (model: RTS-D47K)**

When the system has no BMS function, attach RTS-D47K close to the battery to detect the battery temperature in real time, and the temperature data will be transmitted to the controller via RS485 communication to improve system safety. **Note: It is required to set the BMS protocol number as 32 when connecting the remote temperature sensor to BMS port.**

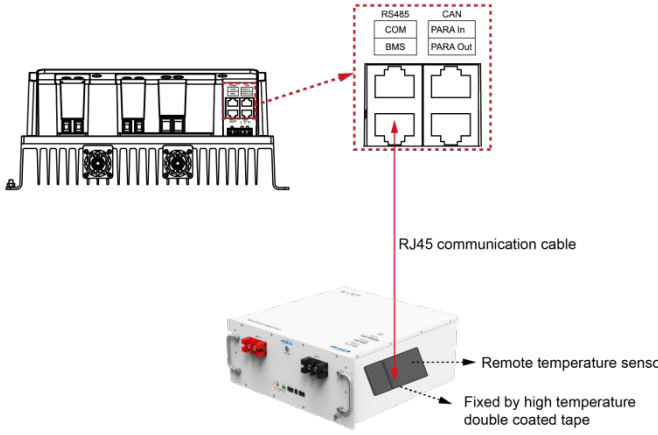

CAUTION	If the remote temperature sensor is not connected to the controller, the default temperature for battery charging is 25°C without temperature compensation.

- **Connect the communication module**

Connect the communication modules such as WiFi, Bluetooth, TCP or 4G modules to the RS485 COM port. You can remotely monitor the controller or modify its related parameters on the APP by phone. For specific setting methods, please refer to the user manuals of communication modules such as Cloud APP, WiFi, Bluetooth, TCP and 4G **(Note: 4G module needs to be powered separately).**

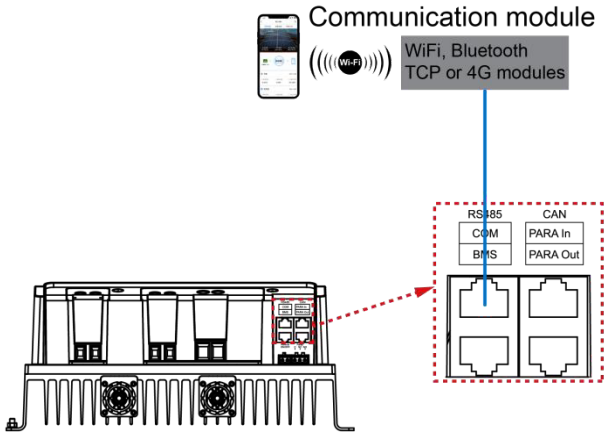

2.6 Power on the controller

Connect the battery's fast-acting fuse to power on the controller. After the LCD normally displays and ensure the charge enable terminals are connected to the controller, connect the PV array's circuit breaker. The charging indicator is flashing slowly during PV charging.

CAUTION	If the controller does not work properly or the fault indicator indicates after the controller is powered on, refer to Chapter 4.2 Troubleshooting.

3 Interface



Note: The LCD can be viewed clearly when the angle between the end-user's horizontal sight and the LCD is within 90°. If the angle exceeds 90°, the information on the LCD cannot be viewed clearly.

3.1 Indicator

Indicator	Color	Status	Description
PV	Green	Solid ON	PV voltage is higher than turn-off voltage, but no charging.
	Green	Solid OFF	1. 1. No sunlight, 2. Connection error, 3. PV low voltage
	Green	Slowly flashing (1Hz)	Charging normally
	Green	Fast Flashing (4Hz)	PV input overvoltage, PV mode error, PV/battery input reverse connection, PV relay connection error, PV power too low
BATT	Green	Solid ON	Battery is normal.
	Green	Slowly flashing (1Hz)	Battery fully charged, SOC discharging protection, SOC low battery alarm
	Green	Fast Flashing (4Hz)	Battery overvoltage, cell overvoltage

Indicator	Color	Status	Description
BATT	Orange	Solid ON	Battery under voltage (including battery pack under voltage), cell under voltage
	Red	Solid ON	Battery over discharging
	Red	Slowly flashing (1Hz)	Battery over temperature, battery low temperature, cell over temperature, cell low temperature, BMS charging protection, BMS discharging protection
BATT	Red	Fast Flashing (4Hz)	BMS other faults, BMS sensor fault, lithium battery rated voltage identification error alarm
PV (fast flashing green) & **BATT** (fast flashing orange)			Equipment over temperature, DSP communication failure

3.2 Buttons

Buttons	Operation	Description
	Press the button (< 50ms)	Exit the current interface.
	Press the button (< 50ms)	Browse the interface: Up/Down Set the browsing interface: Up/Down Parameters setting interface: Increase or decrease the parameter value as per step size.
	Press and hold the button (> 2.5s)	Browse the interface: invalid. Set the browsing interface: invalid. Parameters setting interface: Increase or decrease the parameter value quickly as per step size.
	Press the button (< 50ms)	Confirm the setting parameters.
	Press and hold the button (> 2.5s)	Switch the real-time interface to setting browsing interface. Switch the setting browsing interface to parameter settings interface. Confirm the setting parameters.

3.3 LCD

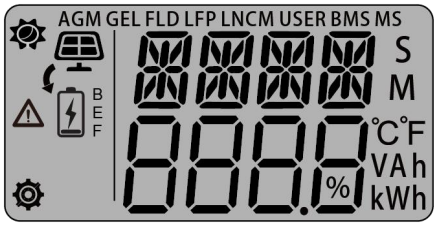

1） Icons

Name	Icon	Status
PV array		Day
		Night
		Not charging
		Charging **Note: "B, E, F" refer to boost charging, equalization charging and float charging respectively.**
	PV1/PV2	Displays the input voltage, input current, input power and input energy of PV1 and PV2, see Chapter 3.4.1 PV real-time data.
Battery	**BAT**	Displays battery voltage, battery charging current, battery charging power, battery SOC, and battery temperature, see chapter 3.4.2 Battery real-time data.

3.4 Browsing real-time data

3.4.1 PV

After the controller is powered on and works normally, press on the LCD initial interface to display the following PV real-time data interfaces in sequence, you can view PV1 input voltage, PV1 input current, PV1 input power, PV1 input energy, PV2 input voltage, PV2 input current, PV2 input power, and PV2 input energy. **Note: Model with single PV input displays PV1 only.**

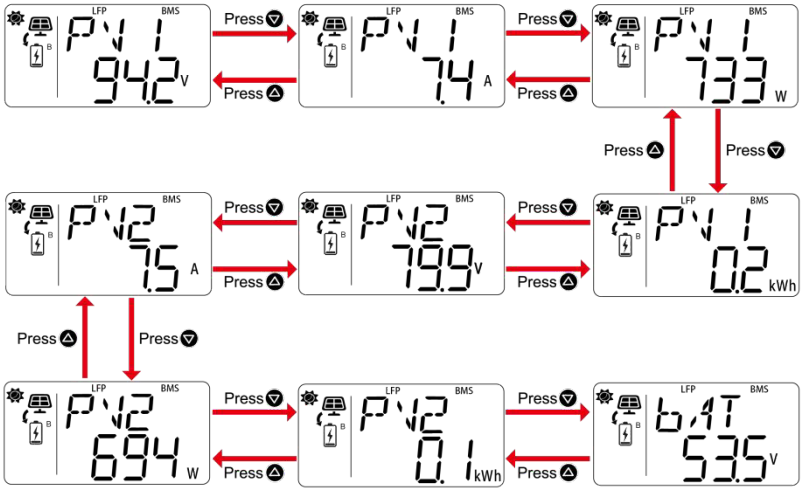

3.4.2 Battery

Click  on the real-time data interface of "PV2 input energy" to display the following battery real-time data interfaces in sequence, you can view the battery voltage, battery charging current, battery charging power, battery SOC, and battery temperature.

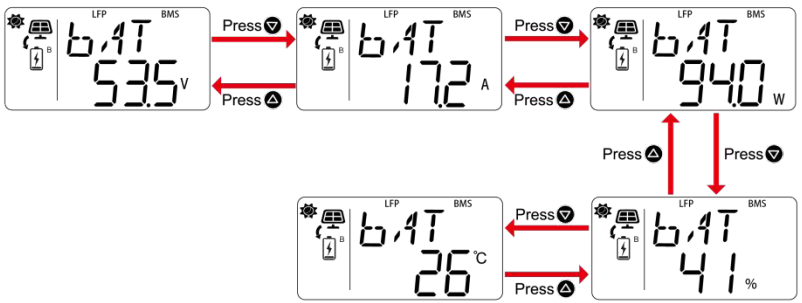

3.5 Parameters setting

Operation steps:

① In PV/battery real-time data browsing interface, press and hold the button to enter the parameter setting interface. → Press the button to select the parameter to be set. → Press and hold the button to enter the setting interface of the parameter (the parameter value is blinking). → Modify the parameter value by pressing the button. → Press the button to confirm the parameter value.

② Press button to exit the parameters setting interface and switch to the real-time data browsing interface.

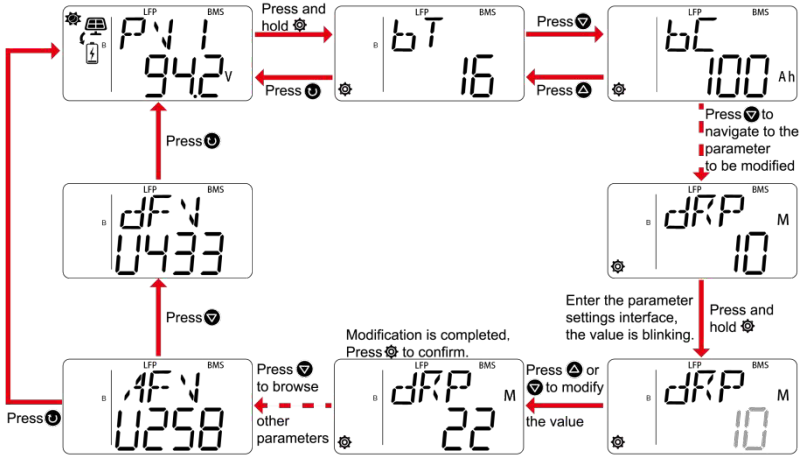

3.5.1 Parameters

The default values and setting range of the controller parameters on the LCD are shown in the following table, except for some read-only parameters, other parameters can be directly modified by the LCD:

No.	Parameters	Default	User define
1	BT (Battery Type)	AGM	**48V system**: AGM, GEL, FLD, LFP15S, LFP16S, LNCM13S, LNCM14S, USER
			24V system: AGM, GEL, FLD, LFP8S, LNCM6S, LNCM7S, USER
			12V system: AGM, GEL, FLD, LFP4S, LNCM3S, USER
2	BC (Battery Capacity)	100Ah	User define: 1–4,000Ah Products of 200Ah and below, small step size 1Ah, large step size 10Ah. Products above 200Ah, small step size 5Ah, large step size 50Ah. **Note: To accurately display the battery capacity, you need to set this parameter according to the actual battery capacity.**
3	TCC (Temperature Compensation Coefficient)	3	0 for lithium battery, 0–9 for non-lithium battery, indicating 0 to -9, step size: 1.
4	RVL (Rated Voltage Level)	0	User define: 0 (auto-recognition), 12V, 24V, 36V, 48V **Note: After modifying the system rated voltage level, restart the controller for the modification to take effect.**
5	OVD (Overvoltage Disconnect Voltage)	16.0V (12V system)	User define: 9.0–17.0V, small step size: 0.1V, large step size: 1V.
		32.0V (24V system)	User define: 18.0–34.0V, small step size: 0.1V, large step size: 1V.
		64.0V (48V system)	User define: 36.0–68.0V, small step size: 0.1V, large step size: 1V.

No.	Parameters	Default	User define
6	CVL (Charging Voltage Limit Voltage)	15.0V (12V system)	User define: 9.0–15.5V, small step size: 0.1V, large step size: 1V.
		30.0V (24V system)	User define: 18.0–31.0V, small step size: 0.1V, large step size: 1V.
		60.0V (48V system)	User define: 36.0–62.0V, small step size: 0.1V, large step size: 1V.
7	OVR (Overvoltage Recovery Voltage)	15.0V (12V system)	User define: 9.0–15.5V, small step size: 0.1V, large step size: 1V.
		30.0V (24V system)	User define: 18.0–31.0V, small step size: 0.1V, large step size: 1V.
		60.0V (48V system)	User define: 36.0–62.0V, small step size: 0.1V, large step size: 1V.
8	ECV (Equalize Charging Voltage)	14.6V (12V system)	User define: 9.0–15.5V, small step size: 0.1V, large step size: 1V.
		29.2V (24V system)	User define: 18.0–31.0V, small step size: 0.1V, large step size: 1V.
		58.4V (48V system)	User define: 36.0–62.0V, small step size: 0.1V, large step size: 1V.
9	BCV (Bulk Charging Voltage)	14.4V (12V system)	User define: 9.0–15.5V, small step size: 0.1V, large step size: 1V.
		28.8V (24V system)	User define: 18.0–31.0V, small step size: 0.1V, large step size: 1V.
		57.6V (48V system)	User define: 36.0–62.0V, small step size: 0.1V, large step size: 1V.
10	FCV (Float Charging Voltage)	13.8V (12V system)	User define: 9.0–15.5V, small step size: 0.1V, large step size: 1V.
		27.6V (24V system)	User define: 18.0–31.0V, small step size: 0.1V, large step size: 1V.
		55.2V (48V system)	User define: 36.0–62.0V, small step size: 0.1V, large step size: 1V.

No.	Parameters	Default	User define
11	BVR (Bulk Voltage Recovery Voltage)	13.2V (12V system)	User define: 9.0–15.5V, small step size: 0.1V, large step size: 1V.
		26.4V (24V system)	User define: 18.0–31.0V, small step size: 0.1V, large step size: 1V.
		52.8V (48V system)	User define: 36.0–62.0V, small step size: 0.1V, large step size: 1V.
12	LVR (Low Voltage Recovery Voltage)	12.6V (12V system)	User define: 9.0–15.5V, small step size: 0.1V, large step size: 1V.
		25.2V (24V system)	User define: 18.0–31.0V, small step size: 0.1V, large step size: 1V.
		50.4V (48V system)	User define: 36.0–62.0V, small step size: 0.1V, large step size: 1V.
13	UVAR (Undervoltage Alarm Recovery Voltage)	12.2V (12V system)	User define: 9.0–15.5V, small step size: 0.1V, large step size: 1V.
		24.4V (24V system)	User define: 18.0–31.0V, small step size: 0.1V, large step size: 1V.
		48.8V (48V system)	User define: 36.0–62.0V, small step size: 0.1V, large step size: 1V.
14	UVA (Undervoltage Alarm Voltage)	12.0V (12V system)	User define: 9.0–15.5V, small step size: 0.1V, large step size: 1V.
		24.0V (24V system)	User define: 18.0–31.0V, small step size: 0.1V, large step size: 1V.
		48.0V (48V system)	User define: 36.0–62.0V, small step size: 0.1V, large step size: 1V.
15	LVD (Low Voltage Disconnect Voltage)	11.1V (12V system)	User define: 9.0–15.5V, small step size: 0.1V, large step size: 1V.
		22.2V (24V system)	User define: 18.0–31.0V, small step size: 0.1V, large step size: 1V.
		44.4V (48V system)	User define: 36.0–62.0V, small step size: 0.1V, large step size: 1V.

No.	Parameters	Default	User define
16	DVL (Discharging Voltage Limit Voltage)	10.6V (12V system)	User define: 9.0–15.5V, small step size: 0.1V, large step size: 1V.
		21.2V (24V system)	User define: 18.0–31.0V, small step size: 0.1V, large step size: 1V.
		42.4V (48V system)	User define: 36.0–62.0V, small step size: 0.1V, large step size: 1V.
17	ECT (Equalize Charging Time)	120M	User define: 0–180 minutes, small step size: 1 minute, large step size: 10 minutes.
18	BCT (Bulk Charging Time)	120M	User define: 0–180 minutes, small step size: 1 minute, large step size: 10 minutes.
19	CDM (Charging/Discharging Mode)	UO-	User define: UO-(voltage compensation), SOC
20	FCPS (Full Charge Protection SOC)	99%	User define: 80%–100%, small step size: 1%, large step size: 5%. **Note: This parameter value must be greater than or equal to FCPR (Full Charge Protection Recovery SOC) plus 2%.**
21	FCPR (Full Charge Protection Recovery SOC)	95%	User define: 80%–99%, small step size: 1%, large step size: 5%.
22	LBAR (Low Battery Alarm Recovery SOC)	10%	User define: 1%–50%, small step size: 1%, large step size: 5%.
23	LBAS (Low Battery Alarm SOC)	8%	User define: 1%–20%, small step size: 1%, large step size: 5%.
24	LBP (Lithium Battery Protection)	OFF	User define: OFF, ON OFF: Disable lithium battery protection ON: Enable lithium battery protection
25	LTCL (Low Temperature Charging Limit)	-5℃	User define: -25℃ to 10℃, small step size: 1℃, large step size: 10℃. **Note: This parameter goes into effect when "LBP (Lithium Battery Protection)" is set as "ON".**

No.	Parameters	Default	User define
26	MEC (Manual Equalize Charging)	OFF	User define: OFF, ON Set to "ON" to enable the controller and start equalization charging.
27	MCC (Battery Max Charging Current) **Note: This parameter cannot be modified when BMS is connected, the charging is controlled by BMS.**	50A	IT5420NC G3： User define: 1–50A, small step size: 1A, large step size: 10A.
		60A	IT6415NC G3 / IT6420NC G3 / IT6415NC G3 BLE: User define: 1–60A, small step size: 1A, large step size: 10A.
		75A	IT7415NC G3 / IT7420NC G3: User define: 1–75A, small step size: 1A, large step size: 10A.
		80A	IT8420NC G3： User define: 1–80A, small step size: 1A, large step size: 10A.
		100A	IT10415NC G3 / IT10420NC G3 / IT10415NC G3 BLE: User define: 1–100A, small step size: 1A, large step size: 10A.
28	BPRO (BMS Protocol)	32	User define: 1–230, small step size: 1, large step size: 10.
29	UBS (Use BMS Settings)	OFF	User define: OFF, ON When set to "ON", after the BMS is enabled and the controller reads valid BMS parameters, it performs current limit control on charging according to the read current limit values of charging. **Note: If "UBS" is set to "ON", the battery voltage control parameters cannot be set; it is required to set "UBS" to "OFF" and restart the controller to set the battery voltage control parameters.**
30	SBM (Simulate BMS Mode)	OFF	User define: OFF, ON When set to "ON", it simulates the BMS end current limiting. **Note: It is used for lithium batteries without BMS communication or BMS without terminal current limiting function.**

No.	Parameters	Default	User define
31	PCM (PV Connection Mode)	CEN	User define: INDE (independent), CEN (Centralize) When two PV arrays are independently input, the value shall be set to "INDE". When two PV arrays are connected in parallel as a single input to the controller (the PV terminals need to be paralleled externally), the value shall be set to "CEN". **Note: When two PV arrays are connected and "PCM (PV Connection Mode)" is set to "CEN", if the PV charging current is less than 9A, there is only one PV array charging the battery; when the PV charging current is greater than 9A, both PV arrays are charging the battery simultaneously.** **Product with one PV input is "IDNE" by default (this parameter setting is invalid).**
32	ADDR (Address)	1	User define: 1–200, small step size: 1, large step size: 10.
33	BAUD (Baudrate)	1,152	User define: 1,152, 96, 24, step size: 24 **Note: After setting the parameter, restart the controller for the setting to take effect.**
34	TU (Temperature Unit)	℃	User define: C, F
35	SBT (Screen Backlight Time)	100S	If there is no operation on the LCD for more than the time set in "SBT", the LCD will turn off. User define: 0–100S, small step size: 1S, large step size: 10S. 0 second indicates solid OFF, while 100 seconds indicate solid ON.
36	SCT (Screen Cycle Time)	2S	The switching time of the real-time interface is 0S by default, that is, the real-time interface is not automatically switched. User define: 0–100S, small step size: 1S, large step size: 10S.

No.	Parameters	Default	User define
37	DRP (Data Record Period)	10M	Set the time interval of the historical data (only refers to the voltage, current and other data stored regularly, excluding the historical faults. These historical data can be exported by the Solar Guardian PC software or Website.) User define: 10–120 minutes, small step size: 1 minute, large step size: 10 minutes.
38	PRCP (PV Restart Charging Period)	10M	The delayed charging time when PV is underpowered due to weather conditions. User define: 0–60 minutes, small step size: 1 minute, large step size: 10 minutes. When set to “0”, there is no delay for PV restart charging period. **Note: Small step size refers to the parameter value that is increased or decreased by clicking the button once, while large step size refers to the parameter value that is increased or decreased by pressing and holding the button once. This concept that appears later will not be repeated.**
39	CPE (Com Port Enable)	ON	User define: OFF, ON When set to “ON”, the communication port is enabled and communication is normal. When set to “OFF”, the external communication is turned off when there is no PV input or charging, otherwise the communication is turned on.
40	ROT (Remote ON/OFF Terminal)	OFF	User define: OFF, ON When set to “ON”, the remote ON/OFF terminal is enabled and can start/stop the controller charging. When the included terminal is connected, the controller is charging; when the included terminal is removed, the controller stops charging. When set to “OFF”, the remote ON/OFF terminal is disabled and the controller is charging by default no matter the terminal is removed from or connected to the controller.
41	CAE (Clear Accumulated Energy)	OFF	User define: OFF, ON When set to “ON”, the accumulated energy is cleared once.

No.	Parameters	Default	User define
42	PMCC (Parallel Battery Max Charging Current)	1,200A	Limit the total current for parallel charging. If the setting value of this parameter exceeds the maximum charging current of an individual controller times the quantity of parallel controllers, the parameter is invalid and the system will limit the charging according to the maximum charging current of the individual controller. User define: 100–1,200A, small step size: 10A, large step size: 100A
43	RFS (Restore Factory Settings)	OFF	User define: OFF, ON When set to "ON", the factory settings are restored once.
44	AFV (ARM Firmware Version)	--	Read-only **Note: Please refer to the actual display for the specific version.**
45	DFV (DSP Firmware Version)	--	Read-only **Note: Please refer to the actual display for the specific version.**

3.5.2 Battery voltage control parameters

◆ **Lead-acid battery parameters**

The following table shows the voltage control parameters of 12V system (12V battery), voltage control parameters and user-define range of 24V system (24V battery) and 48V system (48V battery) are equal to the parameter values of 12V system times 2 and 4 respectively.

Battery Type / Voltage Control Parameters	AGM	GEL	FLD	USER Range
OVD (Overvoltage Disconnect Voltage)	16.0V	16.0V	16.0V	9–17V
CVL (Charging Voltage Limit Voltage)	15.0V	15.0V	15.0V	9–15.5V
OVR (Overvoltage Recovery Voltage)	15.0V	15.0V	15.0V	9–15.5V
ECV (Equalize Charging Voltage)	14.6V	--	14.8V	9–15.5V
BCV (Bulk Charging Voltage)	14.4V	14.2V	14.6V	9–15.5V
FCV (Float Charging Voltage)	13.8V	13.8V	13.8V	9–15.5V
BVR (Bulk Voltage Recovery Voltage)	13.2V	13.2V	13.2V	9–15.5V
LVR (Low Voltage Recovery Voltage)	12.6V	12.6V	12.6V	9–15.5V
UVAR (Undervoltage Alarm Recovery Voltage)	12.2V	12.2V	12.2V	9–15.5V
UVA (Undervoltage Alarm Voltage)	12.0V	12.0V	12.0V	9–15.5V
LVD (Low Voltage Disconnect Voltage)	11.1V	11.1V	11.1V	9–15.5V
DLV (Discharging Voltage Limit Voltage)	10.6V	10.6V	10.6V	9–15.5V
ECT (Equalize Charging Time)	120 minutes	--	120 minutes	0–180 minutes
BCT (Bulk Charging Time)	120 minutes	120 minutes	120 minutes	10–180 minutes

★When the battery type is changed to lithium battery, the lithium battery protection is automatically enabled, and the default values of “ECT” and “BCT” are changed to 10 minutes.

★When the battery type is changed to “AGM, GEL or FLD”, the lithium battery protection is disabled, and the default values of “ECT” and “BCT” are changed to 120 minutes.

★When the battery type is changed to “USER”, the values of lithium battery protection, “ECT” and “BCT” remain the same as the previous battery type.

When the default battery type is selected, the battery voltage control parameters cannot be modified. To change these parameters, select the battery type as "USER". Follow the logic below to set the battery type as “USER”

A. Overvoltage Disconnect Voltage > Charging Voltage Limit Voltage ≥ Equalize Charging Voltage ≥ Bulk Charging Voltage ≥ Float Charging Voltage > Bulk Voltage Recovery Voltage,

B. Overvoltage Disconnect Voltage > Overvoltage Recovery Voltage,

C. Low Voltage Recovery Voltage > Low Voltage Disconnect Voltage ≥ Discharging Voltage Limit Voltage,

D. Undervoltage Alarm Recovery Voltage > Undervoltage Alarm Voltage ≥ Discharging Voltage Limit Voltage,

E. Bulk Voltage Recovery Voltage > Low Voltage Recovery Voltage.

◆ **Lithium battery parameters**

Battery Type / Voltage Control Parameters	LFP			
	LFP4S	USER Range	LFP8S	USER Range
OVD (Overvoltage Disconnect Voltage)	14.5V	9–17V	29.0V	18–34V
CVL (Charging Voltage Limit Voltage)	14.3V	9–15.5V	28.6V	18–31V
OVR (Overvoltage Recovery Voltage)	14.3V	9–15.5V	28.6V	18–31V
ECV (Equalize Charging Voltage)	14.2V	9–15.5V	28.4V	18–31V
BCV (Bulk Charging Voltage)	14.2V	9–15.5V	28.4V	18–31V
FCV (Float Charging Voltage)	13.3V	9–15.5V	26.6V	18–31V
BVR (Bulk Voltage Recovery Voltage)	13.0V	9–15.5V	26.0V	18–31V
LVR (Low Voltage Recovery Voltage)	12.8V	9–15.5V	25.6V	18–31V
UVAR (Undervoltage Alarm Recovery Voltage)	12.2V	9–15.5V	24.4V	18–31V
UVA (Undervoltage Alarm Voltage)	12.0V	9–15.5V	24.0V	18–31V
LVD (Low Voltage Disconnect Voltage)	11.3V	9–15.5V	22.6V	18–31V
DLV (Discharging Voltage Limit Voltage)	11.0V	9–15.5V	22.0V	18–31V

Note:The LFP4S voltage is 12V, the LFP8S voltage is 24V.

Battery Type / Voltage Control Parameters	LFP		
	LFP15S	LFP16S	USER Range
OVD (Overvoltage Disconnect Voltage)	54.7V	59.2V	36–68V
CVL (Charging Voltage Limit Voltage)	53.6V	58.4V	36–62V
OVR (Overvoltage Recovery Voltage)	53.6V	58.4V	36–62V
ECV (Equalize Charging Voltage)	53.3V	57.12V	36–62V
BCV (Bulk Charging Voltage)	53.3V	57.12V	36–62V
FCV (Float Charging Voltage)	50.0V	54.4V	36–62V
BVR (Bulk Voltage Recovery Voltage)	49.7V	53.28V	36–62V
LVR (Low Voltage Recovery Voltage)	48.0V	52.0V	36–62V
UVAR (Undervoltage Alarm Recovery Voltage)	45.7V	51.2V	36–62V

Battery Type / Voltage Control Parameters	LFP		
	LFP15S	LFP16S	USER Range
UVA (Undervoltage Alarm Voltage)	45.0V	49.6V	36–62V
LVD (Low Voltage Disconnect Voltage)	42.5V	46.4V	36–62V
DLV (Discharging Voltage Limit Voltage)	41.5V	44.0V	36–62V

Note:The voltage of LFP15S and LFP16S is 48V.

Battery Type / Voltage Control Parameters	LNCM				
	LNCM3S	USER Range	LNCM6S	LNCM7S	USER Range
OVD (Overvoltage Disconnect Voltage)	12.8V	9–17V	25.6V	29.8V	18–34V
CVL (Charging Voltage Limit Voltage)	12.6V	9–15.5V	25.2V	29.4V	18–31V
OVR (Overvoltage Recovery Voltage)	12.5V	9–15.5V	25.0V	29.1V	18–31V
ECV (Equalize Charging Voltage)	12.5V	9–15.5V	25.0V	29.1V	18–31V
BCV (Bulk Charging Voltage)	12.5V	9–15.5V	25.0V	29.1V	18–31V
FCV (Float Charging Voltage)	12.2V	9–15.5V	24.4V	28.4V	18–31V
BVR (Bulk Voltage Recovery Voltage)	12.1V	9–15.5V	24.2V	28.2V	18–31V
LVR (Low Voltage Recovery Voltage)	10.5V	9–15.5V	21.0V	24.5V	18–31V
UVAR (Undervoltage Alarm Recovery Voltage)	12.2V	9–15.5V	24.4V	28.4V	18–31V
UVA (Undervoltage Alarm Voltage)	10.5V	9–15.5V	21.0V	24.5V	18–31V
LVD (Low Voltage Disconnect Voltage)	9.3V	9–15.5V	18.6V	21.7V	18–31V
DLV (Discharging Voltage Limit Voltage)	9.3V	9–15.5V	18.6V	21.7V	18–31V

Note:The LNCM3S voltage is 12V, the voltage of LNCM6S and LNCM7S is 24V.

Battery Type / Voltage Control Parameters	LNCM		
	LNCM13S	LNCM14S	USER Range
OVD (Overvoltage Disconnect Voltage)	55.4V	59.7V	36–68V
CVL (Charging Voltage Limit Voltage)	54.6V	58.8V	36–62V
OVR (Overvoltage Recovery Voltage)	54.1V	58.3V	36–62V
ECV (Equalize Charging Voltage)	54.1V	58.3V	36–62V
BCV (Bulk Charging Voltage)	54.1V	58.3V	36–62V
FCV (Float Charging Voltage)	52.8V	56.9V	36–62V
BVR (Bulk Voltage Recovery Voltage)	52.4V	56.4V	36–62V
LVR (Low Voltage Recovery Voltage)	45.5V	49.0V	36–62V
UVAR (Undervoltage Alarm Recovery Voltage)	52.8V	56.9V	36–62V
UVA (Undervoltage Alarm Voltage)	45.5V	49.0V	36–62V
LVD (Low Voltage Disconnect Voltage)	40.3V	43.4V	36–62V
DLV (Discharging Voltage Limit Voltage)	40.3V	43.4V	36–62V

Note:The voltage of LFP15S and LFP16S is 48V.

When the battery type is set as "USER", follow the logic below to set the voltage parameters of the lithium battery.

A. Over Voltage Disconnect Voltage>Over Charging Protection Voltage(Protection Circuit Modules(BMS))+0.2V,

B. Over Voltage Disconnect Voltage>Over Voltage Reconnect Voltage＝Charge Voltage Limit Voltage ≥ Equalize Charging Voltage＝Boost Charging Voltage ≥ Float Charging Voltage > Boost Voltage Reconnect Voltage,

C. Low Voltage Reconnect Voltage > Low Voltage Disconnect Voltage ≥ Discharge Voltage Limit Voltage,

D. Under Voltage Warning Reconnect Voltage > Under Voltage Warning Voltage ≥ Discharge Voltage Limit Voltage,

E. Bulk Voltage Recovery Voltage > Low Voltage Recovery Voltage.

F. Low Voltage Disconnect Voltage ≥ Over Discharging Protection Voltage (BMS) + 0.2V

WARNING	• The lithium battery parameters must be set according to its BMS voltage parameters. • It is required that the BMS accuracy of the lithium battery installed in the system is less than or equal to 0.2V, if it is higher than 0.2V, we shall not be liable for any system error.

3.5.3 Control strategy under lithium battery protocol

When the BMS is connected correctly, the BPRO (BMS protocol) is set correctly, and "UBS (Use BMS Settings)" is set to "ON", the system follows the following control strategies:

No.	Status/Condition	Control strategy
1	Battery forced charge request appears.	Forced charge the battery with the charging current value provided by the BMS.
2	The BMS sends an exit forced charge command.	Exit the battery forced charge mode and resumes normal operating mode.
3	Read the charging voltage upper limit and the discharging voltage lower limit from the BMS★	Each control voltage is converted according to the table “Conversion Relationship of Each Control Voltage”, and the system is charged according to the converted voltage value, and the LCD meter displays the converted voltage value. **Note: If the BMS communication is normal but charging voltage upper limit and the discharging voltage lower limit cannot be read, the system will be charged according to the value set by the customer.**
4	Read the charging limit current from the BMS.	Limit the charging current as the read charging current limit value.
5	Turn off charging meter and display BCF.	BMS uploads the battery full charge status (Battery is fully charged).
6	BMS voltage and current limiting parameters are taking effect.	The controller limits charging according to the maximum charging current value uploaded by BMS and the meter displays BLC.

★For the maximum charging voltage and the minimum discharging voltage of the lithium battery, please refer to its specification sheet.

Conversion Relationship of Each Control Voltage

No.	LCD	Control Voltage	Converted Voltage
1	OVD	Over Voltage Disconnect Voltage	Charging Voltage Upper Limit + 0.3 × Level
2	CLV	Charging Limit Voltage	Charging Voltage Upper Limit (namely, the Battery Pack Over Voltage Alarm Voltage)
3	OVR	Over Voltage Reconnect Voltage	Charging Voltage Upper Limit
4	ECV	Equalize Charging Voltage	Charging Voltage Upper Limit - 0.1 × Level
5	BCV	Boost Charging Voltage	Charging limit voltage - 0.1 × Level

No.	LCD	Control Voltage	Converted Voltage
6	FCV	Float Charging Voltage	Charging limit voltage - 0.1 × Level
7	BVR	Boost Voltage Reconnect Voltage	Charging Voltage Upper Limit - 0.8 × Level
8	LVR	Low Voltage Reconnect Voltage	Discharging Voltage Lower Limit + 0.7 × Level
9	UVR	Under Voltage Alarm Recovery Voltage	Discharging Voltage Lower Limit + 0.7 × Level
10	UVW	Under Voltage Alarm Voltage	Discharging Voltage Lower Limit + +0.4 × Level
11	LVD	Low Voltage Disconnect Voltage	Discharging limit voltage (namely, the battery pack under voltage warning voltage)
12	DLV	Discharging Limit Voltage	Discharging limit voltage - 0.7 × Level

3.5.4 Setting parameters remotely

1） Setting the “USER” voltage parameters by PC software

Connect the COM port of the controller to the PC USB port by the USB to RS485 communication cable. Set the “USER” voltage parameters by the PC software.

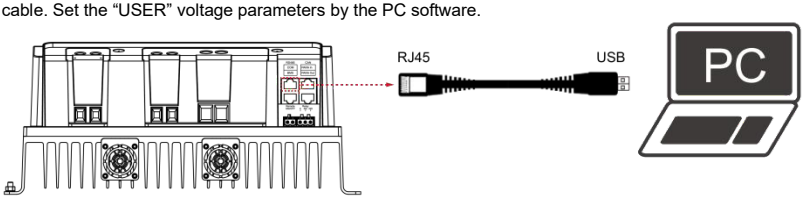

2） Setting by APP

- **Connecting the external WiFi module**

Connect the WiFi module to the COM port of the controller, set the “USER” voltage parameters on the APP through the WiFi signal. For specific setting methods, please refer to the cloud APP manual.

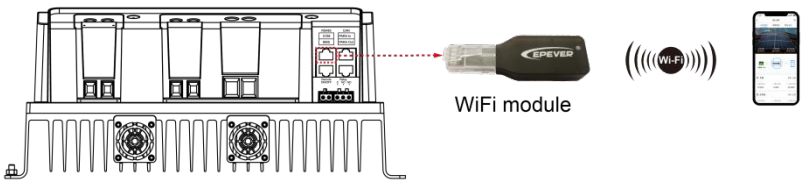

- **Connecting the external Bluetooth module**

Connect the Bluetooth module to the COM port of the controller, set the “USER” voltage parameters on the APP through the Bluetooth signal. For specific setting methods, please refer to the cloud APP manual.

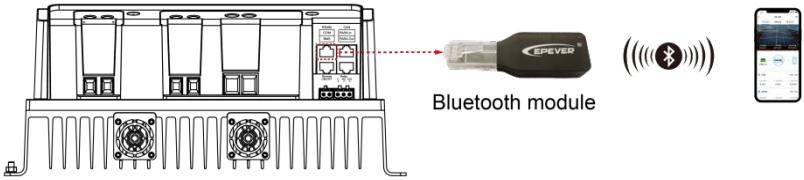

4 Others

4.1 Protections

WARNING	IT-NC G3 / IT-NC G3 BLE series controllers have no battery reverse protection. Do not reverse the battery connection cables when wiring. Otherwise, the controller may be damaged.

Protections	Description
PV current/power-limiting protection	When the actual charging current/power of the PV array exceeds its rated current/power, it will charge the battery as per the rated current/power.
PV short circuit protection	When PV is not charging the battery and is short-circuit, the controller will not be damaged. **WARNING:** It is forbidden to short-circuit the PV array during charging. Otherwise, the controller may be damaged.
PV reverse polarity protection	When the PV array polarity is reversed, the controller will not be damaged and will resume normal operation after correction. **CAUTION: If the PV array is reversed and its actual power is 1.5 times the controller's rated power, the controller will be damaged.**
Night reverse charging protection	At night, since the battery voltage is greater than the PV module voltage, it can prevent the battery from discharging through the PV module.
Battery overvoltage protection	When the battery voltage is higher than the "OVD (Overvoltage Disconnect Voltage)", the controller will automatically stop charging the battery to protect the battery from over charging.
Battery over discharge protection	When the battery voltage is lower than the "LVD (Low Voltage Disconnect Voltage)", the over discharge alarm will occur on the LCD.
Battery over temperature protection	The controller detects the battery temperature by an external temperature sensor. The battery stops working when its temperature goes higher than 65℃ and resumes operation when its temperature is below 55℃.

Protections	Description
Battery reverse polarity protection	When the battery polarity is reversed alone, or the PV and battery are reversed at the same time, or the battery is reversed first and the PV is connected correctly later, the controller will not be damaged and will continue to work after the wiring error is corrected. ⚠ **CAUTION: When PV is connected correctly and the controller is working, then the battery polarity is reversed, the controller will be damaged.**
Lithium battery low temperature charging protection	When the temperature detected by the optional temperature sensor is lower than “LTCL (Low Temperature Charging Limit)”, the controller stops charging automatically. When the detected temperature is higher than the “LTCL”, the controller resumes charging automatically. (The “LTCL” is 0℃ by default and can be set within the range from -40℃ to 10℃. For detailed settings of relevant parameters, please refer to3.5.1 Local parameters list.
Controller over temperature protection★	The controller detects its internal temperature by the internal temperature sensor. The controller stops operating when its internal temperature is higher than 85℃, and resumes operating when its internal temperature is below 75℃.
TVS high voltage surge protection	The internal circuit of this controller is designed with Transient Voltage Suppressors (TVS), which can only protect against high-voltage surge pulses with less energy. If the controller is used in an area with frequent lightning strikes, it is recommended to install an external lightning arrester.

★When the control’s internal temperature is 81℃, the charging power reduction mode is turned on. For every 1°C increase in temperature, the charging power is reduced by 5%, 10%, 20%, and 40% respectively.When the temperature is higher than 85°C , the charging is stopped. While the internal temperature is not more than 75ºC, the controller will resume charging as per the rated charging power.

For example, ET10420NC G3 48V system:

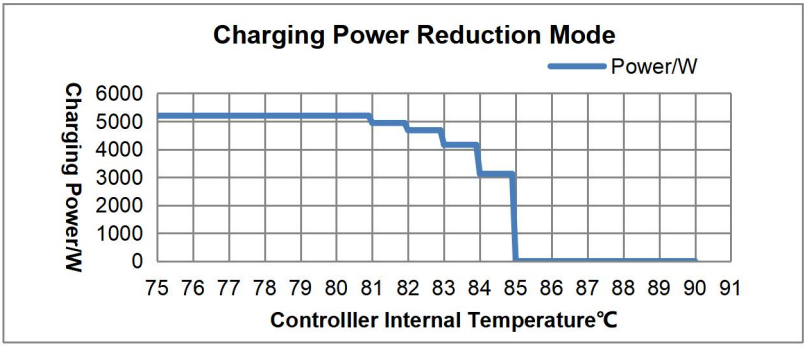

4.2 Troubleshooting

No.	Status	Error Code	Possible Reasons	Troubleshooting
1	PV indicator is fast flashing green.	POV	PV Overvoltage	Check whether the connected PV open circuit voltage is higher than the PV maximum open circuit voltage, and the alarm is cleared when the PV open circuit voltage is lower than the PV maximum open circuit voltage minus 5V.
		PME	PV Work Mode Error	Check whether the PV connection method is consistent with the parameter settings of "PCM (PV Connection Mode)".
		RPP	PV Reverse Polarity Protection	Check whether the PV is connected to the battery correctly.
		PRE	PV Relay Error	Turn off the controller first, wait for 5 minutes, then turn it on again to check whether it returns to normal. If this error persists, please contact our technical support.
		PPL	PV Power Low	Wait until there is sufficient sunlight to check whether the fault is cleared. **Note: "PPL (PV Power Low) refers to PV power is lower than load power when no battery is connected.**

No.	Status	Error Code	Possible Reasons	Troubleshooting
2	BATT indicator is solid orange.	BUV	Battery Under Voltage Alarm (including battery pack under voltage alarm)	Disconnect the loads connection, and check whether the battery voltage is too low. After the battery is charged and its voltage is restored above “UVAR (Under Voltage Alarm Recovery Voltage)”, it will automatically resume normal operation, or recharge the battery with other methods.
		CUV	Cell Under Voltage Protection	Check the BMS communication status or BMS parameters settings.
3	BATT indicator is solid red.	BOD	Battery Over Discharging Protection	Disconnect the loads connected to the battery, and check whether the battery voltage is too low. After the battery is charged and its voltage is restored above “LVR (Low Voltage Recovery Voltage)”, it will automatically resume normal operation, or use other methods to recharge the battery.
4	BATT indicator is fast flashing red.	BOF	BMS Other Fault	Check whether the battery BMS connection is normal.
		BSF	BMS Sensor Fault	
		LBVE	Lithium Battery Rated Voltage Identification Error	Check whether the lithium battery is connected to the controller correctly or the voltage uploaded by BMS is consistent with the voltage at the controller battery terminals.
5	BATT indicator is fast flashing green.	BOV	Battery Over Voltage Protection	Disconnect all charging and measure whether the battery voltage is too high, and check whether the voltage of the connected battery matches the rated voltage level of the controller, or check whether the setting value of the battery "OVD (Overvoltage Disconnect Voltage)" is inconsistent with the battery specifications. After the battery voltage drops below the set value of “OVR (Overvoltage Recovery Voltage)”, the alarm will automatically be cleared.
		COV	Cell Over Voltage Protection	Check the BMS communication status or BMS parameters settings.

No.	Status	Error Code	Possible Reasons	Troubleshooting
6	BATT indicator is slowly flashing red.	BOT	Battery Over Temperature	Ensure the battery is installed in a cool and well-ventilated place, check that the battery actual charging and discharging current does not exceed the set values of "Battery Max Charging Current". (If BMS is connected, “MCC” is the read value from the BMS, which cannot be set. When the battery temperature drops below the "BATT OTPR (Battery Over Temperature Recovery)", the controller resumes normal charging control.
		BLT	Battery Low Temperature	Check whether the ambient temperature is lower than the “LTCL (Low Temperature Charging Limit)” and “LTDL (Low Temperature Discharging Limit)”, when the ambient temperature is higher than the "LTCL + 2℃” or “LTDL + 2℃”, the battery resumes normal operating.
		COT	Cell Over Temperature Protection	Check the BMS communication status or BMS parameters settings.
		CLT	Cell Low Temperature Protection	
		BCP	BMS Charging Protection	
		BDP	BMS Discharging Protection	
7	BATT indicator is slowly flashing green.	SLBP	SOC Low Battery Protection	Charge the battery to LBAR (Low Battery Alarm Recovery SOC)

No.	Status	Error Code	Possible Reasons	Troubleshooting
8	--	BOCD	BMS Over Current Discharging Alarm	Check the BMS communication status or BMS parameters settings.
		BOCC	BMS Over Current Charging Alarm	
		BLC	BMS voltage and current limiting parameters are taking effect	BMS is normal and no troubleshooting is required.
		PIDR	Parallel ID Repetition	Check whether the IDs of parallel equipment is repeated.
9	PV indicator is fast flashing green. BATT indicator is fast flashing orange.	DOT	Device Over Temperature	Ensure the controller is installed in a cool and well-ventilated place, When the controller temperature drops below the "DOT (Device Over Temperature)", the controller resumes normal charging control.
		DCF	DSP Communication Fault	Turn off the controller first, wait for 5 minutes, then turn it on again to check whether it returns to normal. If this error persists, please contact our technical support.

4.3 Maintenance

To maintain long-term working performance, it is recommended to have the following items inspected twice a year.

- Ensure the airflow around the inverter is not blocked, and remove dirt or debris from the heat sink.
- Check whether the insulation of exposed cables have been damaged by sunlight, friction with other surrounding objects, dryness, insects or rodents, etc. Repair or replace the cables if necessary.
- Check whether the indicator and display are consistent with the actual operation of the equipment, and note that corrective action should be taken in case of inconsistency or error.
- Check terminals for signs of corrosion, insulation damage, high temperature or burning/discoloration, tighten terminal screws.
- Check for signs of dirt, insect nesting and corrosion and clean up as required.
- If the lightning arrester has failed, replace it in time to avoid lightning strikes' damage to the controller or even other equipment.

 **WARNING**	Risk of electric shock! Ensure that the power supply of the controller is disconnected when performing the above operations!

5 Specifications

Model	ET5420NC G3
Electrical Parameters	
Battery Rated Voltage	12/24/48VDC or Auto
Controller Operating Voltage Range	8–62V
Battery Type	AGM (Default) / Gel / Flooded / User
Lithium Battery Type	LiFePO4 / Li (NiCoMn)O2 / User
Rated Charging/Discharging Current	50A
Rated Charging Power	650W/12V; 1,300W/24V; 2,600W/48V
Maximum Charging Power	650W/12V; 1,300W/24V; 2,600W/48V
PV Maximum Open-circuit Voltage	200V (@ lowest temperature); 180V (@ 25℃)①
MPPT Operating Voltage Range	(Battery voltage plus 2V, and > 28V) to 144V (@ 25 ℃)
Tracking Efficiency	≥ 99.5%
Maximum Conversion Efficiency	98.3%
Temperature Compensation Coefficient	-3mV/℃/2V (Default)
Self-consumption (Enabled Communication)	98mA/12V; 60mA/24V; 46mA/48V
Self-consumption (Disabled Communication)	48mA/12V; 25mA/24V; 14mA/48V
Grounding Type	Common negative grounding
Dry Contact (Oil Generator)	Rated value: 5A/30VDC; Maximum value: 0.5A/60VDC
RS485 Communication Port	5VDC/200mA (RJ45)
Mechanical Parameters	
Dimension (Length × Width × Height) IP43 (Controller & White Terminal Cover)	307 × 253 ×143mm
Dimension (Length × Width × Height) IP32 (Controller Only)	307 × 202 ×134mm
Mounting Dimension (Length × Width)	295 × 130mm
Mounting Hole Size	Φ7mm
Wiring Terminal	6AWG/16mm^2
Recommended Cable	6AWG/16mm^2
Net Weight IP43 (Controller & White Terminal Cover)	5.00Kg
Net Weight IP32 (Controller Only)	4.79Kg

①The controller starts charging the battery when PV voltage is higher than 35V. The controller stops charging the battery when the PV voltage is lower than 25V.

Model	ET7420NC G3
Electrical Parameters	
Battery Rated Voltage	12/24/48VDC or Auto
Controller Operating Voltage Range	8–62V
Battery Type	AGM (Default) / Gel / Flooded / User
Lithium Battery Type	LiFePO4 / Li (NiCoMn)O2 / User
Rated Charging/Discharging Current	75A
Rated Charging Power	975W/12V; 1,950W/24V; 3,900W/48V
Maximum Charging Power	975W/12V; 1,950W/24V; 3,900W/48V
PV Maximum Open-circuit Voltage	200V (@ lowest temperature); 180V (@ 25℃)①
MPPT Operating Voltage Range	(Battery voltage plus 2V, and > 28V) to 144V (@ 25 ℃)
Tracking Efficiency	≥ 99.5%
Maximum Conversion Efficiency	98.1%
Temperature Compensation Coefficient	-3mV/℃/2V (Default)
Self-consumption (Enabled Communication)	98mA/12V; 60mA/24V; 46mA/48V
Self-consumption (Disabled Communication)	48mA/12V; 25mA/24V; 14mA/48V
Grounding Type	Common negative grounding
Dry Contact (Oil Generator)	Rated value: 5A/30VDC; Maximum value: 0.5A/60VDC
RS485 Communication Port	5VDC/200mA (RJ45)
Mechanical Parameters	
Dimension (Length × Width × Height) IP43 (Controller & White Terminal Cover)	320 × 263 ×158mm
Dimension (Length × Width × Height) IP32 (Controller Only)	320 × 212 ×149mm
Mounting Dimension (Length × Width)	308 × 140mm
Mounting Hole Size	Φ7mm
Wiring Terminal	2AWG/35mm^2
Recommended Cable	4AWG/25mm^2
Net Weight IP43 (Controller & White Terminal Cover)	6.55Kg
Net Weight IP32 (Controller Only)	6.33Kg

①The controller starts charging the battery when PV voltage is higher than 35V. The controller stops charging the battery when the PV voltage is lower than 25V.

Model	ET10420NC G3
Electrical Parameters	
Battery Rated Voltage	12/24/48VDC or Auto
Controller Operating Voltage Range	8–62V
Battery Type	AGM (Default) / Gel / Flooded / User
Lithium Battery Type	LiFePO4 / Li (NiCoMn)O2 / User
Rated Charging/Discharging Current	100A
Rated Charging Power	1,300W/12V; 2,600W/24V; 5,200W/48V
Maximum Charging Power	1,300W/12V; 2,600W/24V; 5,200W/48V
PV Maximum Open-circuit Voltage	200V (@ lowest temperature); 180V (@ 25℃)①
MPPT Operating Voltage Range	(Battery voltage plus 2V, and > 28V) to 144V (@ 25 ℃)
Tracking Efficiency	≥ 99.5%
Maximum Conversion Efficiency	98.5%
Temperature Compensation Coefficient	-3mV/℃/2V (Default)
Self-consumption (Enabled Communication)	98mA/12V; 60mA/24V; 46mA/48V
Self-consumption (Disabled Communication)	48mA/12V; 25mA/24V; 14mA/48V
Grounding Type	Common negative grounding
Dry Contact (Oil Generator)	Rated value: 5A/30VDC; Maximum value: 0.5A/60VDC
RS485 Communication Port	5VDC/200mA (RJ45)
Mechanical Parameters	
Dimension (Length × Width × Height) IP43 (Controller & White Terminal Cover)	352 × 263 ×158mm
Dimension (Length × Width × Height) IP32 (Controller Only)	352 × 212 ×149mm
Mounting Dimension (Length × Width)	340 × 140mm
Mounting Hole Size	Φ7mm
Wiring Terminal	2AWG/35mm^2
Recommended Cable	2AWG/35mm^2
Net Weight IP43 (Controller & White Terminal Cover)	7.79kg
Net Weight IP32 (Controller Only)	7.55kg

①The controller starts charging the battery when PV voltage is higher than 35V. The controller stops charging the battery when the PV voltage is lower than 25V.

Environmental Parameters

Operating Temperature Range	-25℃ to +60℃ (Derating when temperature is higher than 40℃)
LCD temperature range	-20℃ to +70℃
Storage Temperature Range	-30℃ to +70℃
Relative Humidity	5%–95% (N.C)
Altitude	< 5,000M (Derating when altitude is higher than 2,000m)
Enclosure	IP43 (Controller & White Terminal Cover); IP32 (Controller Only)
Pollution Degree	PD2

Certification:

Category	Standard
Safety	EN/IEC62109-1
EMC	EN61000-6-1 / EN61000-6-3
FCC	47 CFR Part 15, Subpart B
ROHS	IEC62321-3-1

6 Appendixes

6.1 Appendix 1 Dimensions

(Unit: mm)

- **ET5420NC G3: IP43 (Controller & White Terminal Cover)**

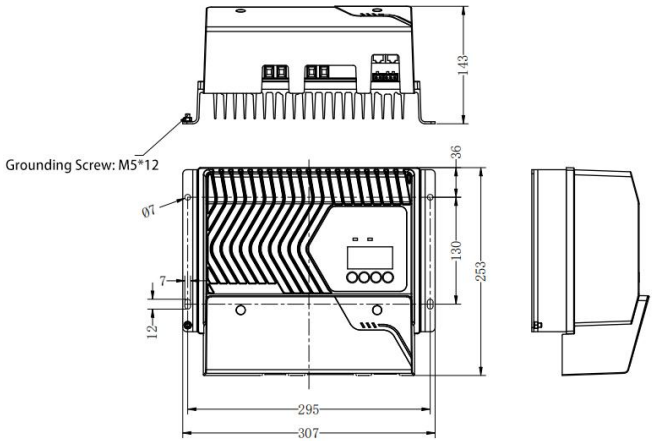

- **ET5420NC G3: IP32 (Controller Only)**

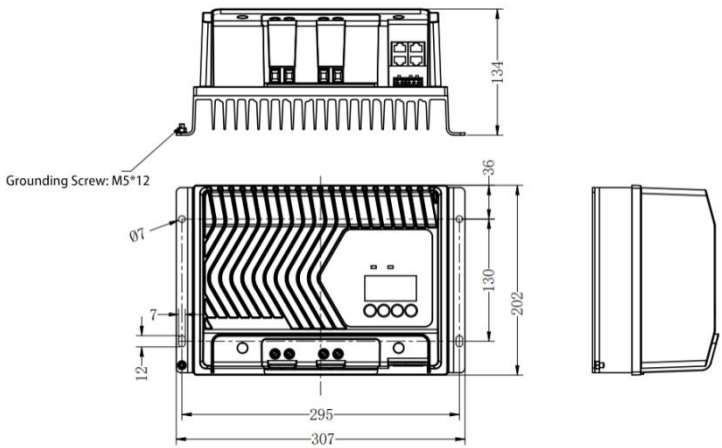

- **ET7420NC G3: IP43 (Controller & White Terminal Cover)**

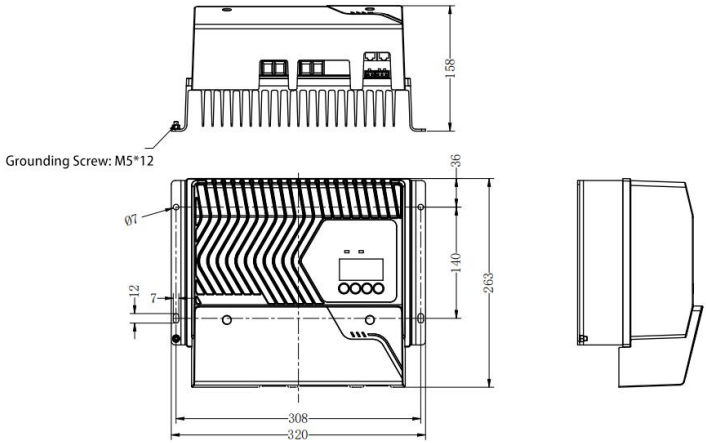

- **ET7420NC G3: IP32 (Controller Only)**

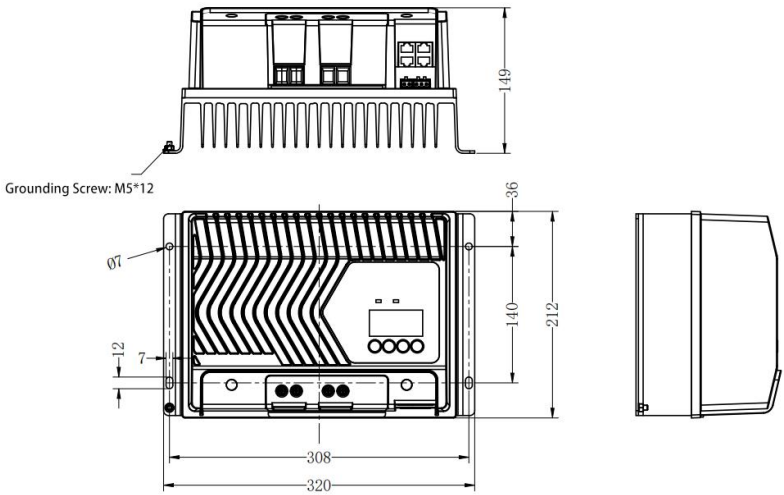

- **ET10420NC G3: IP43 (Controller & White Terminal Cover)**

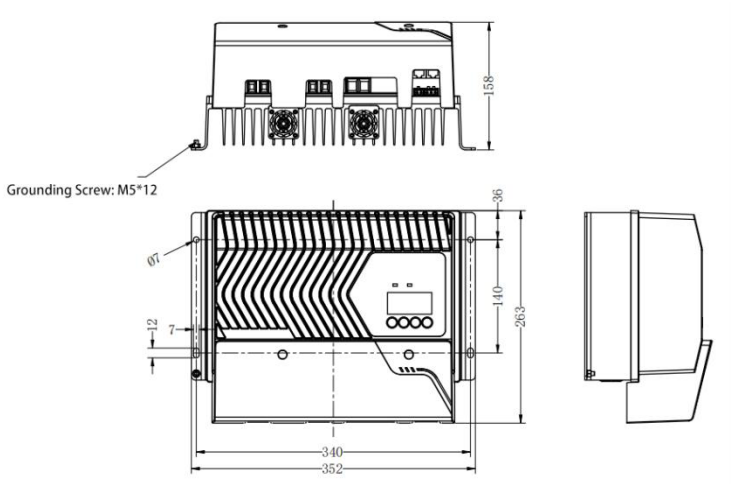

- **ET10420NC G3: IP32 (Controller Only)**

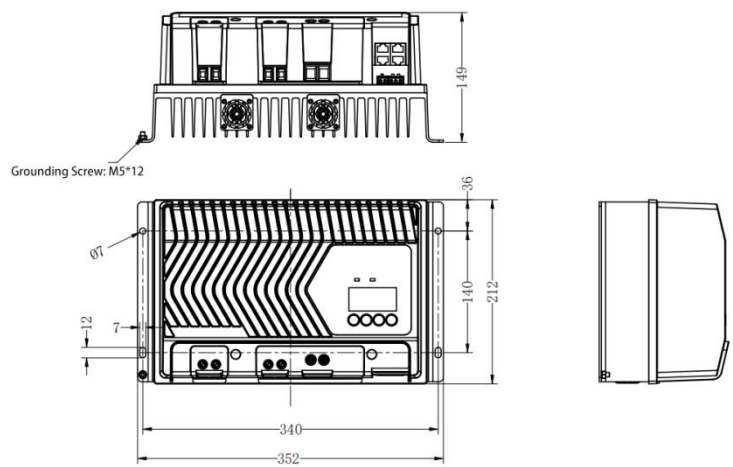

6.2 Appendix 2 Index of Abbreviations

- **LCD Parameter Setting Abbreviations**

Abbreviations	Full Name
BT	Battery Type
DFV	DSP Firmware Version
AFV	ARM Firmware Version
PMCC	Parallel Maximum Charging Current
CAE	Clear Accumulated Energy
CPE	Com Port Enable
PRCP	PV Restart Charging Period
DRP	Data Record Period
SCT	Screen Cycle Time
SBT	Screen Backlight Time
TU	Temperature Unit
BAUD	Baud rate
ADDR	Address
PCM	PV Connection Mode
SBM	Simulate BMS Mode
UBS	Use BMS Settings
BPRO	BMS Protocol
MCC	Battery Max Charging Current
MEC	Manual Equalize Charging
LBP	Lithium Battery Protection
LTCL	Low Temperature Charging Limit
LBAS	Low Battery Alarm SOC
LBAR	Low Battery Alarm Recovery SOC
FCPR	Full Charge Protection Recovery SO
FCPS	Full Charge Protection SOC
CDM	Charging/Discharging Mode

Abbreviations	Full Name
BCT	Boost Charging Time
ECT	Equalize Charging Time
DVL	Discharging Voltage Limit Voltage
LVD	Low Voltage Disconnect Voltage
UVA	Under Voltage Alarm Voltage
UVAR	Under Voltage Alarm Recovery Voltage
LVR	Low Voltage Reconnect Voltage
BVR	Boost Voltage Reconnect Voltage
FCV	Float Charging Voltage
BCV	Boost Charging Voltage
ECV	Equalize Charging Voltage
OVR	Over Voltage Reconnect Voltage
CVL	Charging Limit Voltage
OVD	Over Voltage Disconnect Voltage
RVL	Rated Voltage Level
TCC	Temperature Compensation Coefficient
BC	Battery Capacity
ROT	Remote ON/OFF Terminal
RFS	Restore Factory Settings

- **Error Codes Abbreviations**

Abbreviations	Full Name
POV	PV Overvoltage
PME	PV Work Mode Error
RPP	PV Reverse Polarity Protection
PRE	PV Relay Error
PPL	PV Power Low
BUV	Battery Under Voltage Alarm (including battery pack under voltage alarm)
BOV	Battery Over Voltage Protection
BOD	Battery Over Discharging Protection
BOT	Battery Over Temperature
BLT	Battery Low Temperature
COV	Cell Over Voltage Protection
CUV	Cell Under Voltage Protection
CLT	Cell Low Temperature Protection
COT	Cell Over Temperature Protection
BOF	BMS Other Fault
BSF	BMS Sensor Fault
BCP	BMS Charging Protection
BDP	BMS Discharging Protection
SDP	SOC Discharging Protection
SLBP	SOC Low Battery Protection
BOCD	BMS Over Current Discharging Alarm
BOCC	BMS Over Current Charging Alarm
BLC	BMS voltage and current limiting parameters are taking effect
DOT	Device Over Temperature
DCF	DSP Communication Fault
LBVE	Lithium Battery Rated Voltage Identification Error Alarm

HUIZHOU EPEVER TECHNOLOGY CO., LTD.

Tel: +86-752-3889706

E-mail: info@epever.com

Website: www.epever.com