

# Installation manual
# EV Ultra Fast Charger

Smarter. Greener. Together.

# Table of contents


1 Change logs ..... 2
2 Important safety and grounding instructions ..... 3
2.1 Safety and compliance ..... 3
2.2 Grounding instructions ..... 3
3 Before installation ..... 4
3.1 Safety requirements ..... 4
3.2 Recommended tools ..... 4
3.3 Important safety instructions ..... 4
4 Site preparation ..... 5
4.1 Power connection ..... 5
4.1.1 Circuit breaker rating and cable cross section ..... 5
4.1.2 Required cable length ..... 6
4.2 LAN cabling ..... 7
4.3 Load-management connection ..... 7
4.4 Load-management cabling ..... 7
4.5 Required distances and dimensions ..... 8
4.5.1 Wall distance ..... 8
4.5.2 Collision protection pole ..... 9
4.5.3 Cable entry ..... 10
5 Preparing for the installation ..... 12
6 Commissioning ..... 17
7 Load-management connection installation ..... 18
8 Application guidance lightning protection ..... 21
9 Network connection ..... 22
9.1 Sites with 1 EV Ultra Fast Charger ..... 22
9.1.1 Ethernet connection ..... 22
9.1.2 Wireless connection ..... 23
9.2 Sites with more EV Ultra Fast Chargers ..... 24

# 1 Change logs

Change logs for this document:

| Date | Document version | Responsible | Changes |
|---|---|---|---|
| 26.10.2018 | 3.0 | MKLs | Included change log |
| 2.11.2018 | 3.1 | MKLs | Added clarification for IP connection |
| 29.11.2018 | 3.2 | MKLs | Updated circuit breaker rating and cable cross section according to IEC 60364-5-52:2011 |
| 03.04.2019 | 3.3 | MKLs | Updated connection diagram - load-management connection box |
| | | | |
| | | | |
| | | | |
| | | | |

# 2 Important safety and grounding instructions

## 2.1 Safety and compliance

- Read the manual before installation or usage of device.
- Do not put tools, material or body parts into the electric vehicle connector.
- Do not use the EV Ultra fast charger if the chassis, power cord or charging cable are frayed, have broken insulation, or any other signs of damaged.
- Do not install or use the Ultra fast charger if the enclosure is broken, cracked, open or has any other indications of damage.
- The EV Ultra fast charger should be installed only by a qualified technician.
- To maintain environmental control of device, EV Ultra fast charger should be powered up immediately after installation.
- Make sure that the materials used and the installation procedures follow local building codes and safety standards.
- The information provided in this manual in no way exempts the user of responsibility to follow all applicable codes or safety standards.
- The manufacturer is not responsible for physical injury, damage to property or equipment caused by the installation of this device.
- This document provides instructions for the EV Ultra fast charger and should not be used for any other product. Before installation or use of this product, you should review this manual carefully and consult with a licensed contractor, licensed electrician, or trained installation expert to make sure of compliance with local building codes and safety standards.

## 2.2 Grounding instructions

An equipment grounding conductor or a grounded, metal, and permanent wiring system is required for the EV Ultra fast charger connection. This should be run with circuit conductors and connected to the equipment grounding bar or lead on the EV Ultra fast charger.

# 3 Before installation

## 3.1 Safety requirements

Be sure to preview the standard operating procedures (SOP) and ensure local building and electrical codes are reviewed before installing the EV Ultra fast charger.

The EV Ultra fast charger should be installed by a trained technician according to the instruction manual and local safety regulations.

Use appropriate protection when connecting to the main power distribution cable.

## 3.2 Recommended tools

The following tools are recommended for the EV Ultra fast charger installation:

- (1x) No.2 Philips screw driver
- M10 hexagon screw (optional for OPI2020)
- M10 flat washer (optional for OPI2020)
- M10 or M12 expansion bolts
- (1x) concrete drill
- (1x) wire cutters
- (1x) 17mm ratcheting wrench for the base
- (1x) RJ45 crimping tool
- RJ45 connectors

## 3.3 Important safety instructions

- **Save these Instructions.**
- **The EV Ultra fast charger should be installed only by a licensed contractor, and/or a licensed electrician in accordance with all applicable state, local and national electrical codes and standards.**
- **Before installing the EV Ultra fast charger, review this manual carefully and consult with a licensed contractor, licensed electrician and trained installation expert to ensure compliance with local building practices, climate conditions, safety standards, and state and local codes.**



**Warning!** Danger of electrical shock or injury. Turn OFF power at the panel board or load center before working inside the equipment or removing any component. Do not remove circuit protective devices or any other component until the power is turned OFF.



**Caution!** TO AVOID DAMAGE TO THE CHARGER OR PERSONAL INJURY, MAKE SURE THE INSTALLATION LOCATION IS ABLE TO SUPPORT THE WEIGHT OF THE ULTRA FAST CHARGER.

# 4 Site preparation

## 4.1 Power connection

EV Ultra Fast Charger should be connected to 3 phase power line (L, N, PE) with appropriate copper cable. Device should be protected with dedicated circuit breaker.

Follow below chapters to identify and prepare site for EV Ultra Fast Charger installation.

EV Ultra Fast Charger is equipped with RCD breakers for AC output (AC Type 2 plug, AC Type 2 socket).

To maintain environmental control of device, EV Ultra fast charger should be powered up immediately after installation. Not powered EV Ultra fast charger may be damaged due to improper environmental conditions.

### 4.1.1 Circuit breaker rating and cable cross section

The tables below points the recommended fusing and cable cross section. The site planning process must count with local regulations and codes, exact fusing, cable type and manufacturer. It is recommended to ask Delta customer service in case of use different ratings. Delta is not responsible for oversizing or undersizing of cabling and protection.

The maximal AC current is the current draw by charger in case that grid voltage in place of installation is on lowest allowed limit. Charger operating voltage is 230V/400V±10%, thus lowest voltage limit is 207V/360V.

As the charger is configurable in terms of power steps and charging points, different configuration results in different charger consumption. To calculate consumption use following general equation:

$$Inom = qty\ of\ modules \times module\ nominal\ current + AC\ socket\ current + AC\ plug\ current + half\ cooling\ current$$

$$Imax = qty\ of\ modules \times module\ maximal\ current + AC\ socket\ current + AC\ plug\ current + full\ cooling\ current$$

$$module\ nominal\ current = 19{,}29A, \qquad module\ maximal\ current = 21{,}43A,$$

$$AC\ socket\ current = 32A, \qquad AC\ plug\ current = 63A$$

$$half\ cooling\ current = 1A, \qquad full\ cooling\ current = 2A$$

Example of calculation for charger with 100kW DC charge capacity, 22kW AC and 43kW AC charge capacity:

$$Inom = 8 \times 19{,}29 + 32 + 63 + 1 = 250\ A$$

$$Imax = 8 \times 21{,}43 + 32 + 63 + 2 = 268\ A$$

Example of calculation for charger with 150kW DC charge capacity, 22kW AC and 43kW AC charge capacity:

$$Inom = 12 \times 19{,}29 + 32 + 63 + 1 = 327\ A$$

$$Imax = 12 \times 21{,}43 + 32 + 63 + 2 = 354\ A$$

**Note!** Charger controller will limit $I_{max}$ current to 336A.

The recommended minimal cable cross section accepted by charger terminals is 95mm$^2$. The maximal cable cross section accepted by terminals is 300mm$^2$. Site planning needs to check if the cable diameter and bending radius is suitable for cable glands and plinth dimensions.

Use of aluminium cable is prohibited. The charger is cyclic load resulting to cycling thermal expansion and contraction of cables. This increase risk of hotspots. During annual maintenance, check the cable connection in charger and also in distribution board.

Available AC connection – current rating for EV QC with DC plugs, AC 22kW.

| DC charge capacity [kW] | 50 | 110kW platform | 150kW platform |
|---|---|---|---|
| Maximal AC current [A] | 120 | 227 | 291 |
| Fuse rating in AC distribution [A] | 125 | 250 | 315 |
| Cable cross section (Cu) [mm2] | 95 | 185 | 240 |

Available AC connection – current rating for EV QC with DC plugs, AC 43kW.

| DC charge capacity [kW] | 50 | 110kW platform | 150kW platform |
|---|---|---|---|
| Maximal AC current [A] | 151 | 258 | 322 |
| Fuse rating in AC distribution [A] | 160 | 315 | 355 |
| Cable cross section (Cu) [mm2] | 95 | 240 | 300 |

Available AC connection – current rating for EV QC with DC plugs, AC 43kW and AC 22 kW.

| DC charge capacity [kW] | 50 | 110kW platform | 150kW platform |
|---|---|---|---|
| Maximal AC current [A] | 183 | 290 | 354 |
| Fuse rating in AC distribution [A] | 200 | 315 | 355 |
| Cable cross section (Cu) [mm2] | 120 | 240 | 300 |

**Note!** Cable cross section is based on IEC 60364-5-52:2011 standard (Cu conductor, multi-core cable, 3 live cores, PVC insulation, in the earth – D2 case). Site specific conditions must be taken into account for proper dimensioning. For different types of cables and installation conditions please refer to cable fact sheet or consult with Delta customer service.

### 4.1.2 Required cable length

Installation site should be prepared with AC cabling to supply L1, L2, L3, N, PE. Cable length should be at least 1,5 meter long from base. Cable should be prepared inside the footprint of the EV quick Charger. Check exact cable location in chapter 4.5.3

## 4.2 LAN cabling

Installation site should be prepared with gel outdoor CAT5e Ethernet LAN cable. Cable should be crimped with RJ45 connector following Ethernet standard.

Required Ethernet cable length is 2 meters long.

- Ethernet 2m

Cable should be prepared inside the footprint of the EV quick Charger. Check exact cable location in chapter 4.5.3

## 4.3 Load-management connection

Installation of the load-management equipment should be allowed in power meter room.

- In close distance to power meter
- Box size ~20x40x30cm (D x W x H)
- AC power supply available

Cable connection distance between power meter room and EVC should not exceed 250m

## 4.4 Load-management cabling

Installation site should be prepared with outdoor CAT5e gel outdoor CAT5e cable. Required cable length is 2 meters long.

- Ethernet 2m

Cable should be prepared inside the footprint of the EV quick Charger. Check exact cable location in chapter 4.5.3

Cable distance between power meter room and EVC should not exceed 250m

## 4.5 Required distances and dimensions

### 4.5.1 Wall distance

Device is equipped with door on every side. Therefore it cannot be installed close to obstacles that could limit access to EV Ultra Fast Charger. Safe distance between closed unit and wall that allows to open rear door is approx. 820 mm.

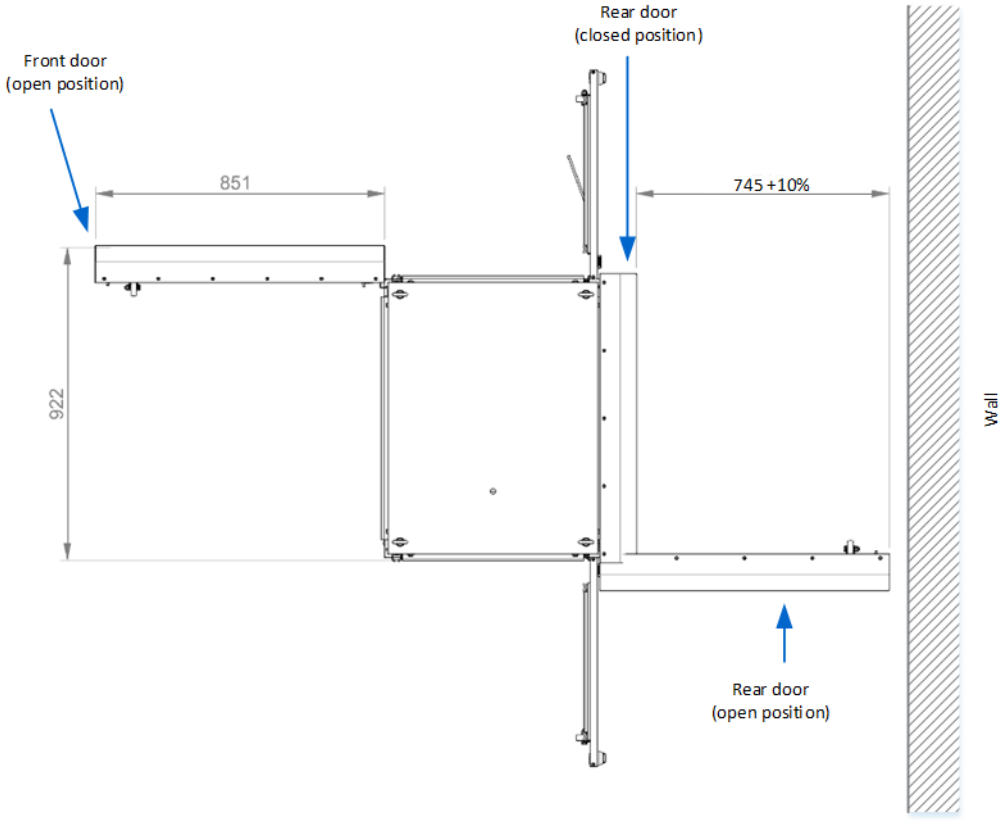


Figure 1 Wall distance

## 4.5.2 Collision protection pole

EV Ultra Fast Charger can be protected against accidental damages by protection poles installed in front of device. Available space for installation is limited due to required maintenance tasks and necessity to access device. Position of collision protection pole is marked in green zone below.

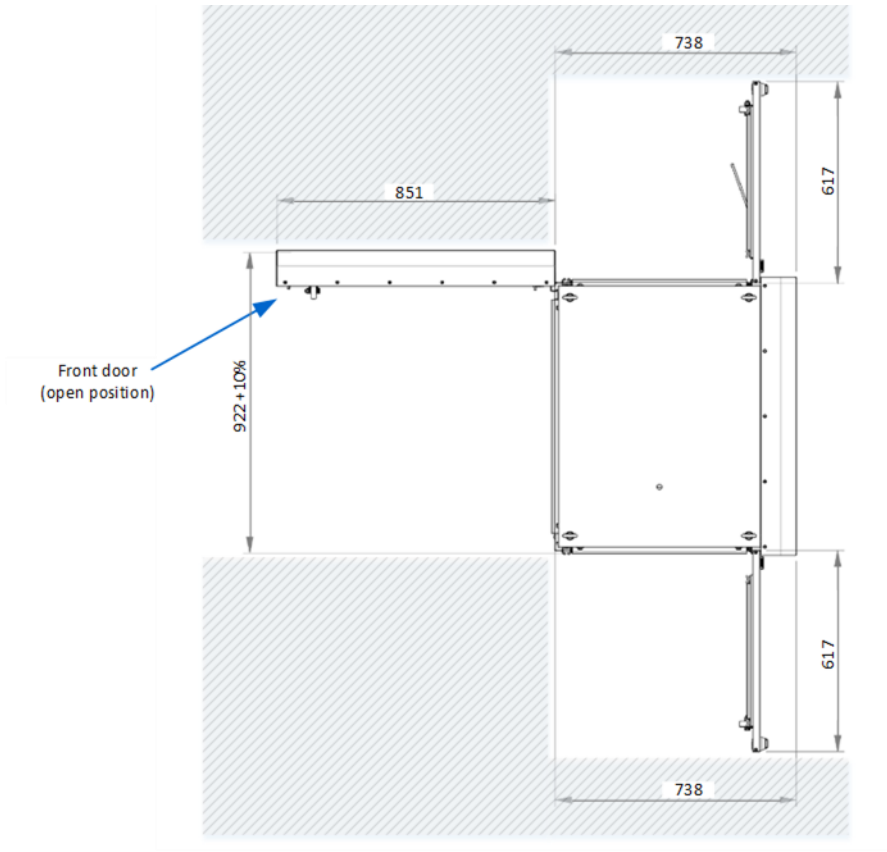


Figure 2 Collision protection pole install zone

## 4.5.3 Cable entry

EV Ultra Fast Charger should be connected with cables entering from the bottom of the device. Plinth is equipped with dedicated cable glands. Dimensions of the cable entry are visible in pictures below.

Cable should be prepared inside the footprint of the EV quick Charger. Picture below shows dimensions of the plinth and cable entry. Notice plinth dimensions are different than overall footprint.

Exact cable location should be inside green color marked zone.

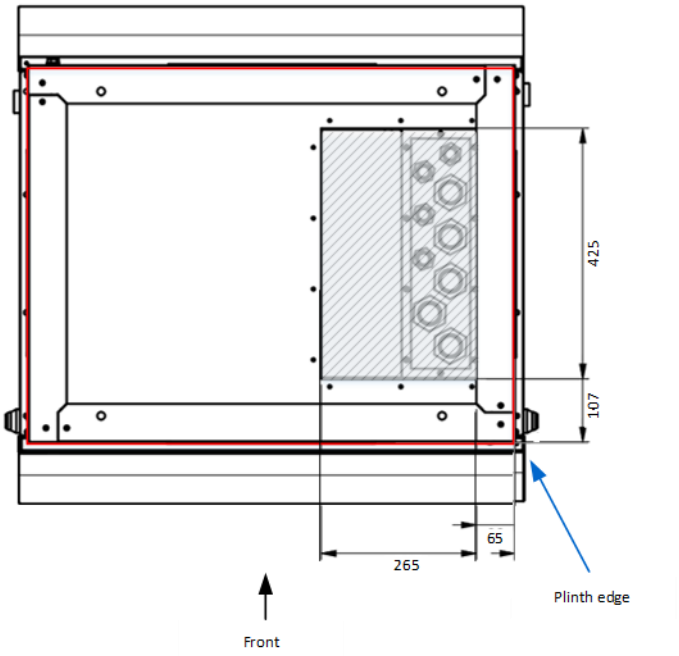


Figure 3 Cable entry zone – top view

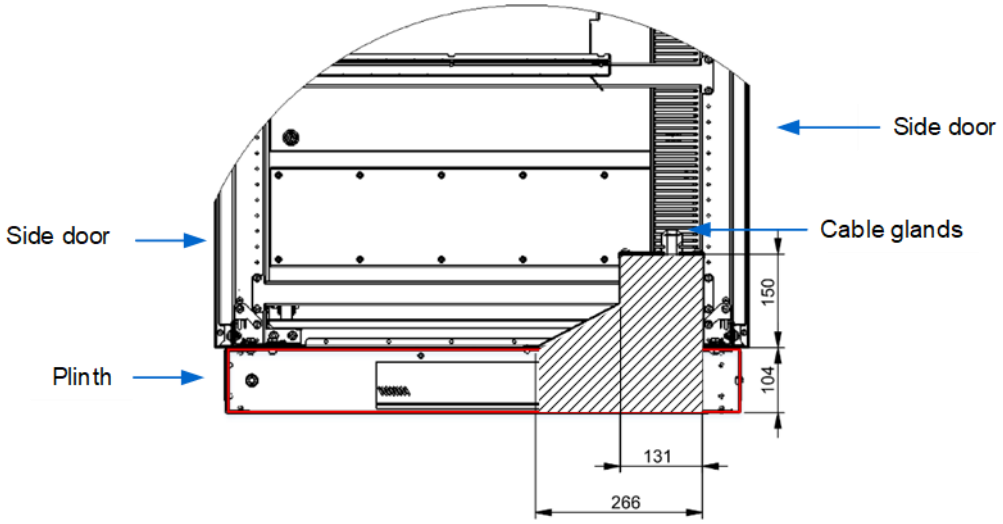


Figure 4 Cable entry zone – front view

# 5 Preparing for the installation

Step 1 Prepare the concrete base for EV Ultra fast charger according to the figure below. The dimensions of the concrete base should allow installation of the cabinet's plinth on it (external size c.a.
W 825 x D 650).

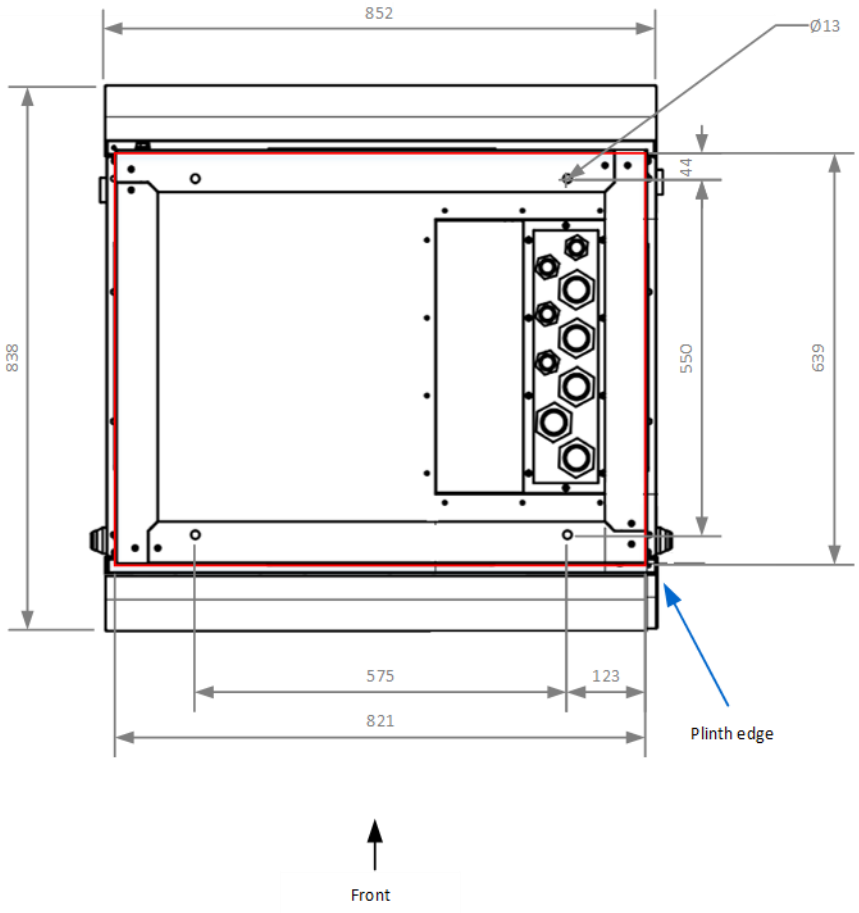


Figure 5 Installation dimensions – top view

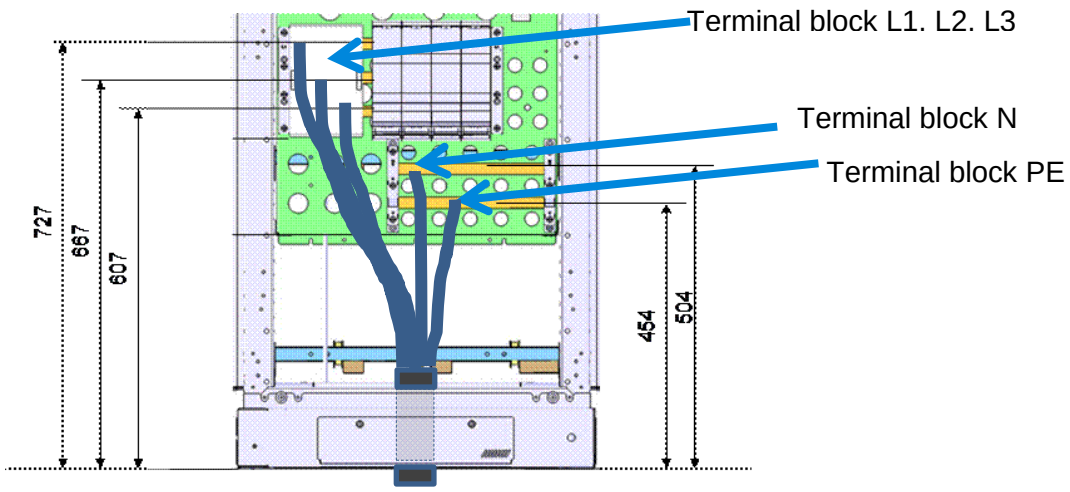


Figure 6 Installation dimensions – AC connections

Step 2 Prepare holes for 4 x M10 Anchor bolts.

Step 3 Remove plinth hatches seen in figure below.




Figure 7 Remove plinth hatches

Step 4 Lift the charger up and put on concrete.

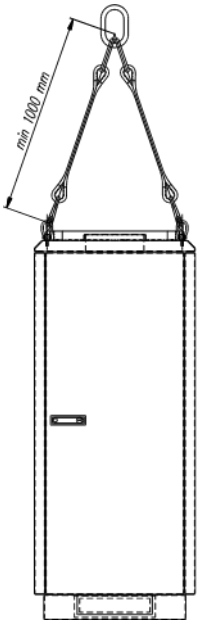


Figure 8 Lifting cabinets by crane

Step 5 Fix the anchors with nuts.

Step 6 Provide cables to distribution through cable glands bottom plate.

Step 7 Open the main fuses.

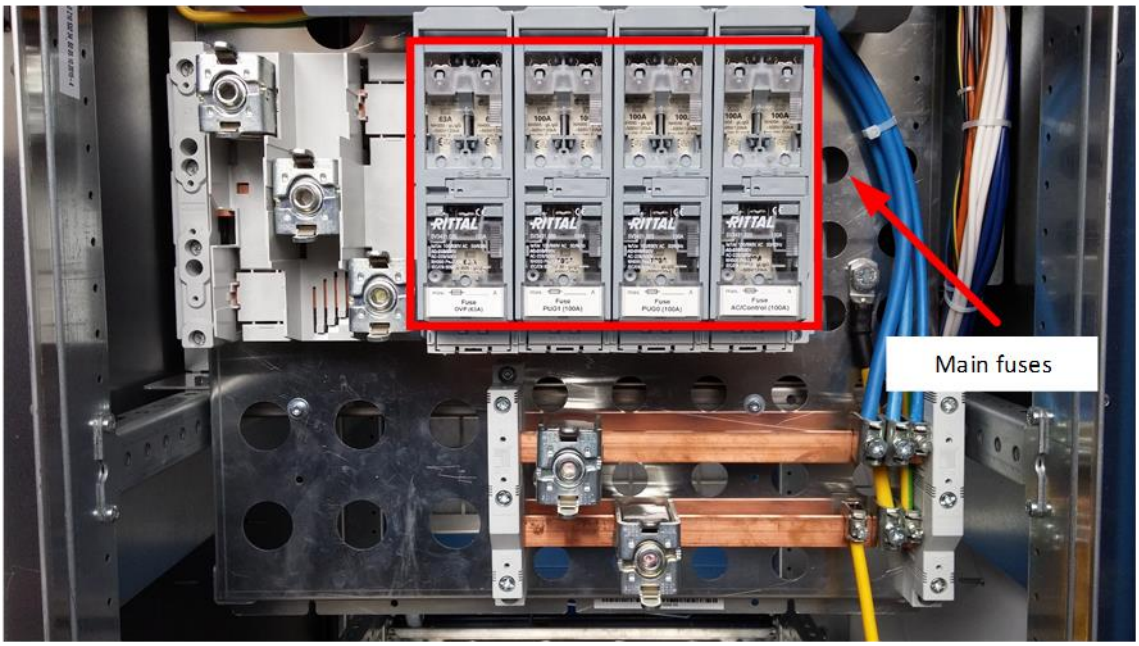


Figure 9 Main fuses

Step 8 Connect the LAN cable if applicable. (Please refer to chapter 9.1.1 for detailed description.)

Step 9 For wireless connection, install SIM card in the modem. (Please refer to chapter 9.1.2 for detailed description.)

**Note!** If Ultra Fast Charger is equipped with Proxy system with DEEMS, then the SIM card – back office connection, is in the RUT955 device (please, refer to Figure 17).

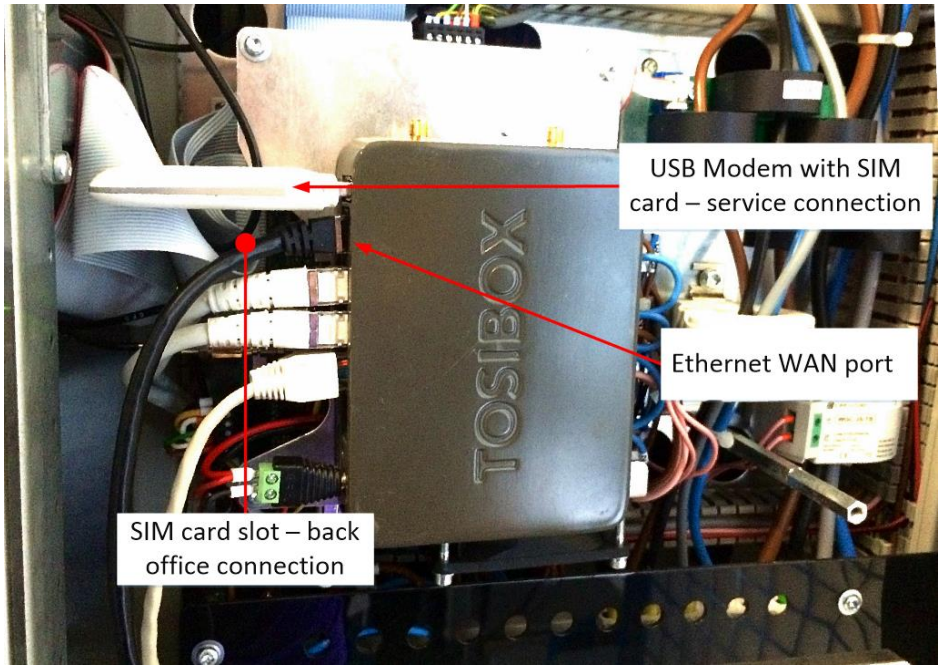


Figure 10 SIM card and LAN cable

Step 10 Connect the AC cables with a 30 Nm torque: first P connection, second Neutral, third three lines. The cable size must be 300 mm² diameters at maximum. The maximum current and cable cross section are defined upon system configuration and local regulations.

**Note!** 300 Arms required for maximum system configuration.

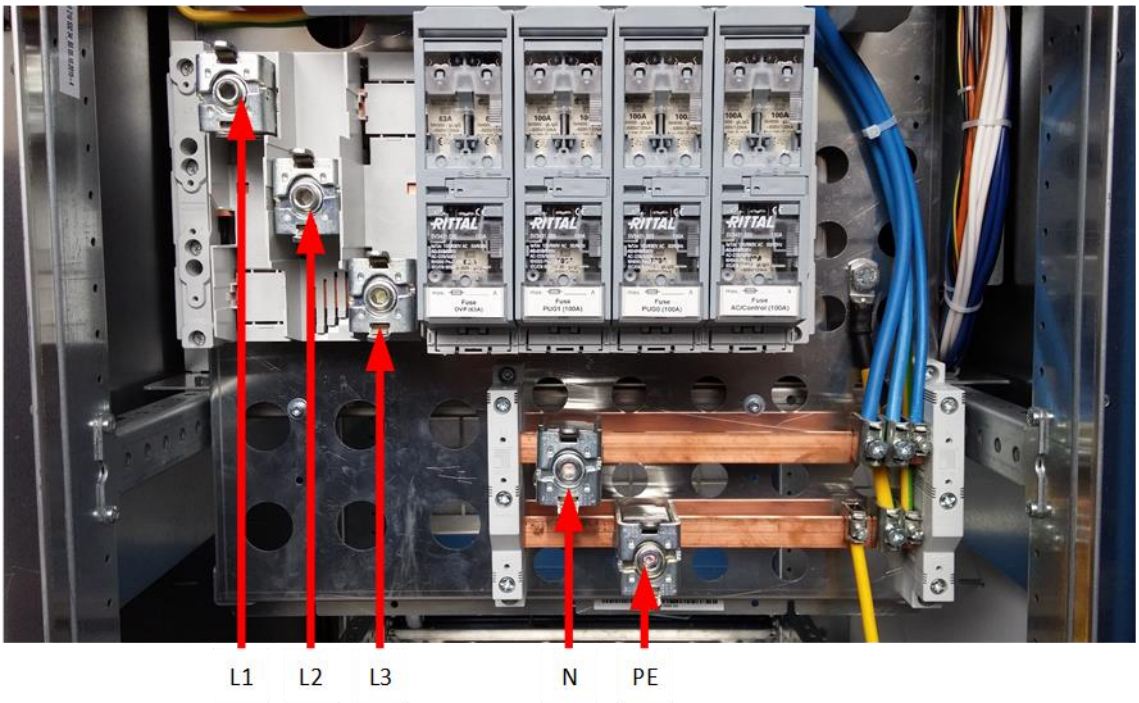


Step 11 Perform a visual and mechanical inspection especially to the cables, guns and user interface to make sure they are not damaged.

Step 12 Remove the eyebolts after installation. Plug the eyebolt holes with provided plugging bolts. See figure below.

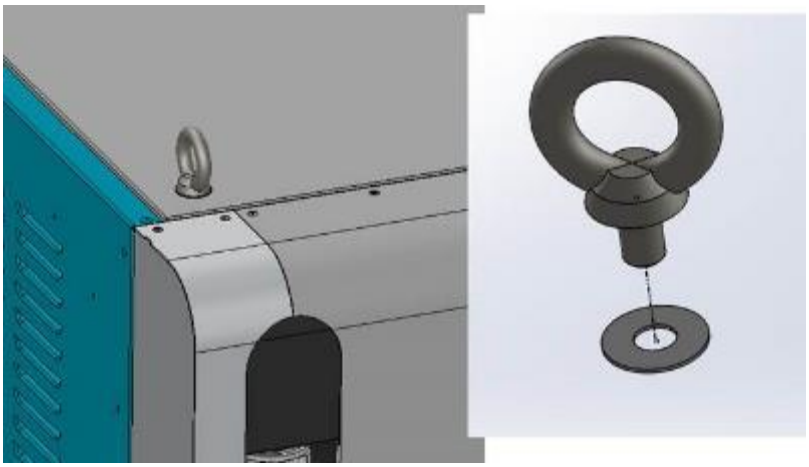

Figure 11 Lifting eyebolts

Step 13 Make sure plastic cushion protecting power modules are removed from all shelves.

# 6 Commissioning

Step 1 Make sure that the control power breaker is open and that all power module breakers and RCDs are closed.

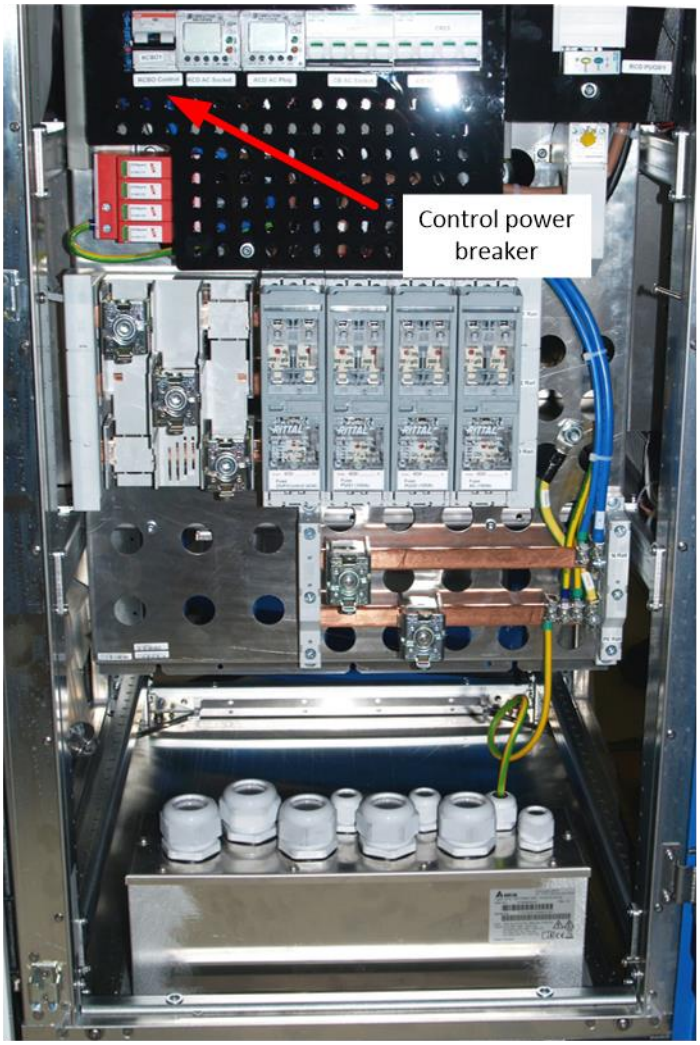


Figure 12 Control power breaker open

Step 2 Close main fuses.

Step 3 Close the control power breaker.

Step 4 Fix cabinet hatches back again.

# 7 Load-management connection installation

Solution with power management can be subject of further adjustments and changes even though principle of the connection remains unchanged.

Step 1 Fix load-management connection box in the power meter room.

Step 2 Connect signalling device of kWh impulses port S0+ to port DI0 of ioLogic R1212 device.

Step 3 Connect signalling device of kWh impulses port S0- to GND bat inside load-management connection box.

Step 4 Connect signalling device of 15 min intervals port S0+ to port DI1of ioLogic R1212 device

Step 5 Connect signalling device of 15 min intervals port S0- to GND bar inside load-management connection box.

Step 6 Connect data+ cable to RS485 port D1+ and data- cable to port D1- of of ioLogic R1212 device.

Use outdoor type, CAT5e cable, and route it to the EVC to terminate connection.

Step 7 Make sure 120Ohm resistor is fixed on RS485 port between D1+ and D1-.

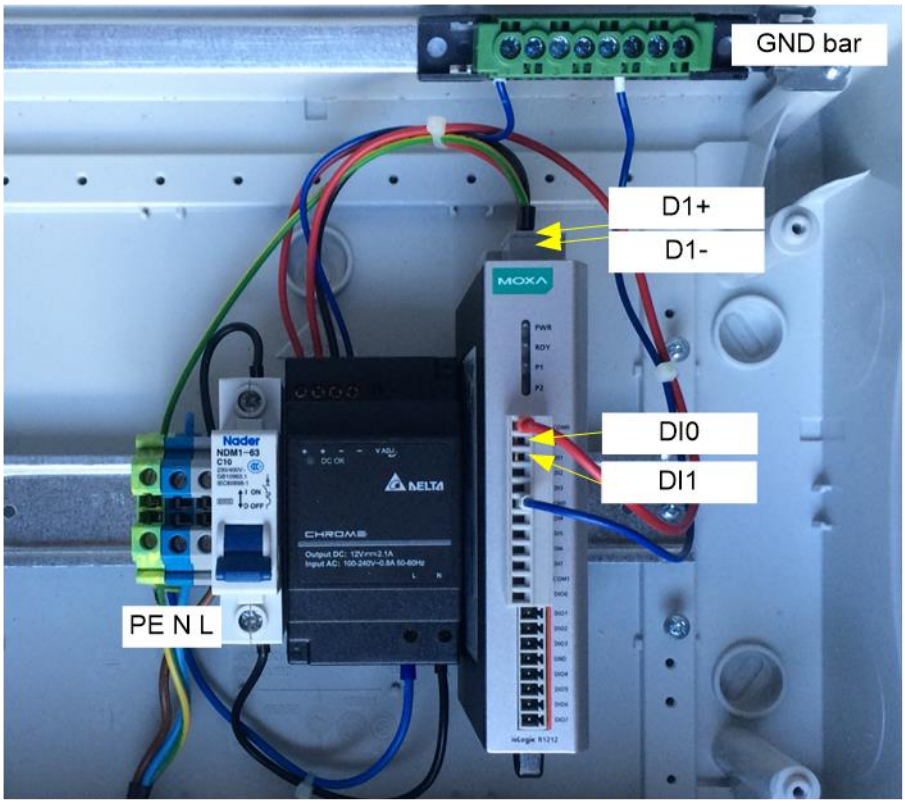


Figure 13 Connection points

**Caution!** Make documentation which colour wires were used on RS485 terminal of ioLogic R1212 device. It is important for proper connection establishing in commissioning stage.

Step 8 Make sure ioLogic R1212 device is set with value 1 in X1 position (refer to 0).

Step 9 Make sure ioLogic R1212 device is set with value 1 in X10 position (refer to 0).

Step 10 Make sure ioLogic R1212 device is set off in Dual Run (refer to 0).

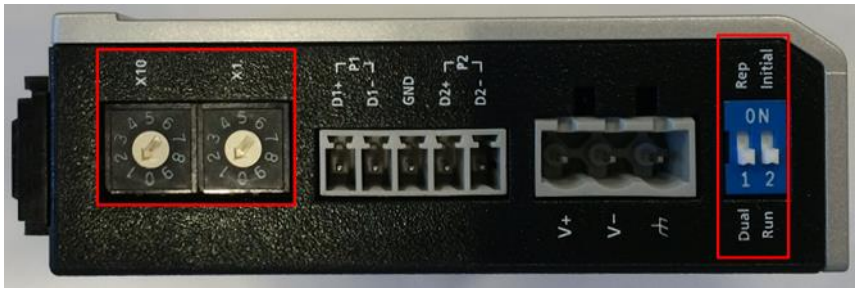


Figure 14 ioLogic settings

Step 11 Connect L, N and PE cables to terminals.

Step 12 Switch on MCB.

Step 13 Confirm ioLogic R1212 device is signalling “PWR” and RDY statuses.

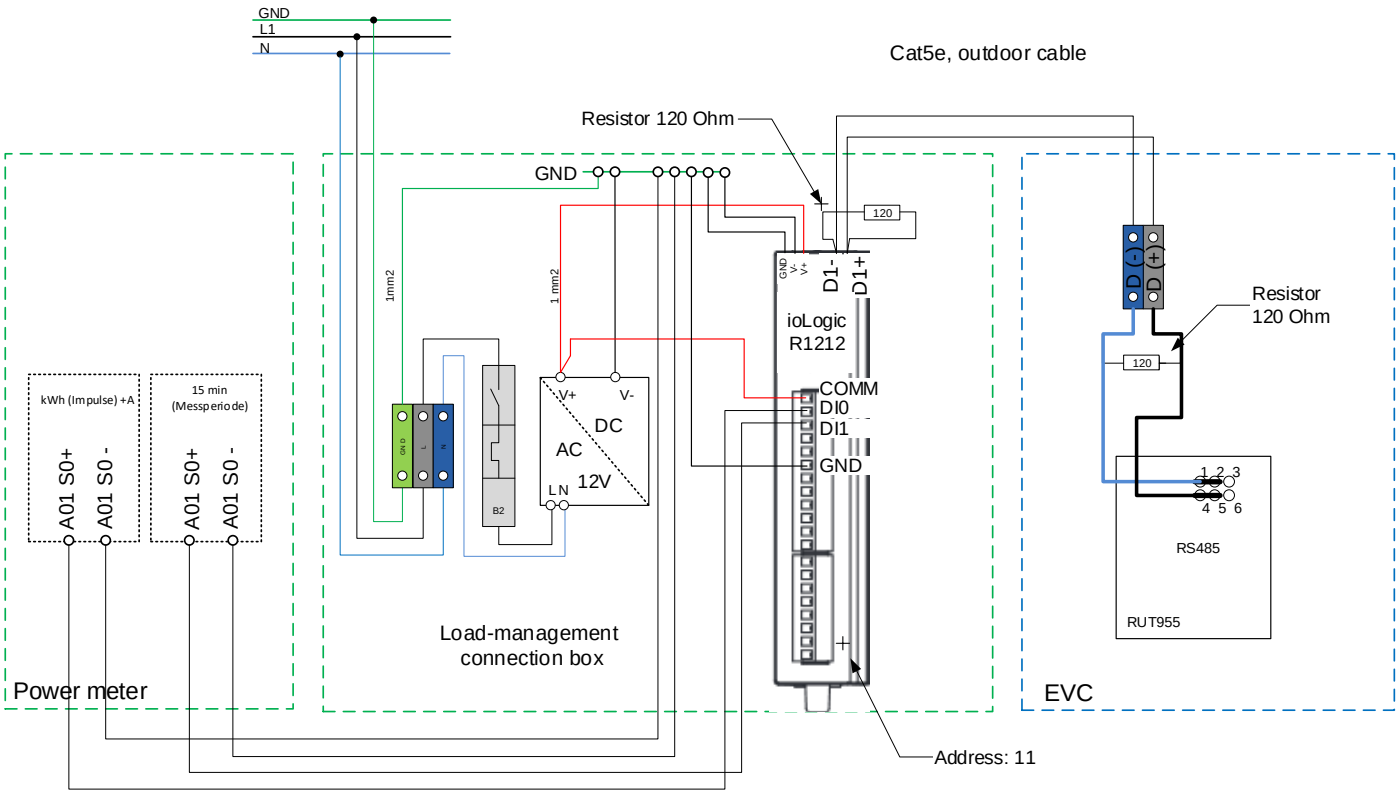


Figure 15 Load-management connection box – connection diagram

Data connections inside Ultra Fast Charger

Step 14 Connect data+ cable to grey terminal D(+) (RS485 port – pin4,5) and data- cable to blue terminal D(-) (port RS485 – pin1,2) of RUT955 device (refer to Figure 15, Figure 17).

Step 15 Make sure pins 1 and 2 of RS485 port on RUT955 are wired together.

Step 16 Make sure pins 4 and 5 of RS485 port on RUT955 are wired together.

Step 17 Make sure 120Ohm resistor is fixed on RS485 port between terminals D(+) and D(-)




Figure 16 RUT955 – RS485 connection port

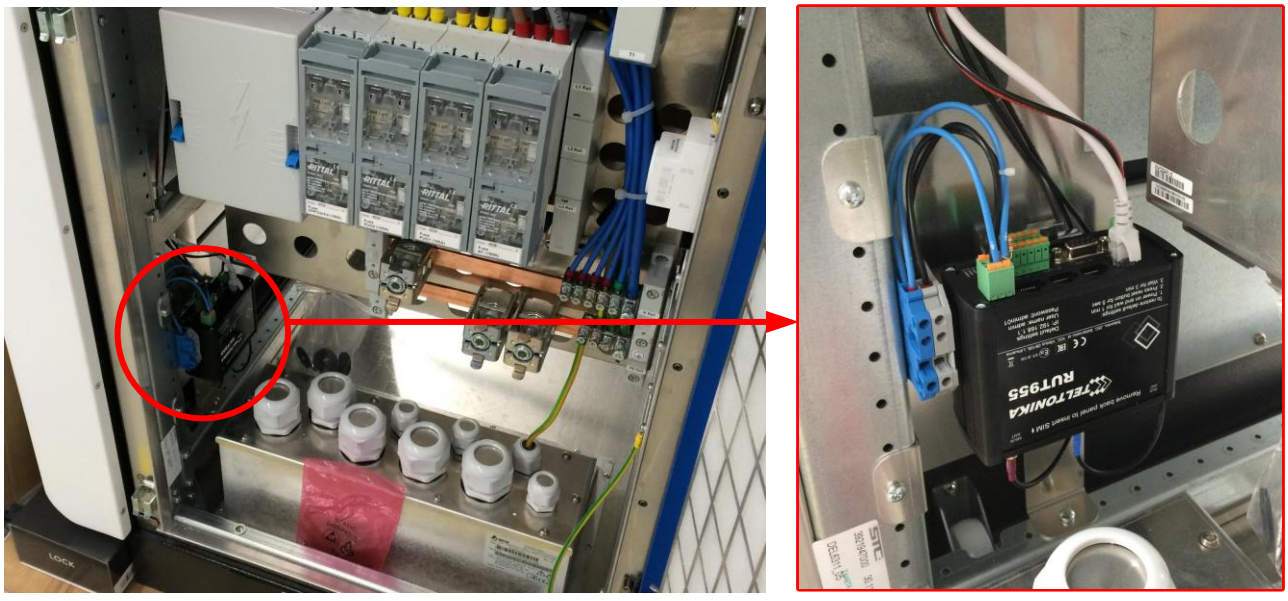


Figure 17 RUT955 – view inside of Ultra Fast Charger cabinet

# 8 Application guidance lightning protection

To protect the charger against damage caused by lightning, a three level protection concept according to IEC 60364-5-53/A2 is mandatory to limit transients & energy absorption step by step.

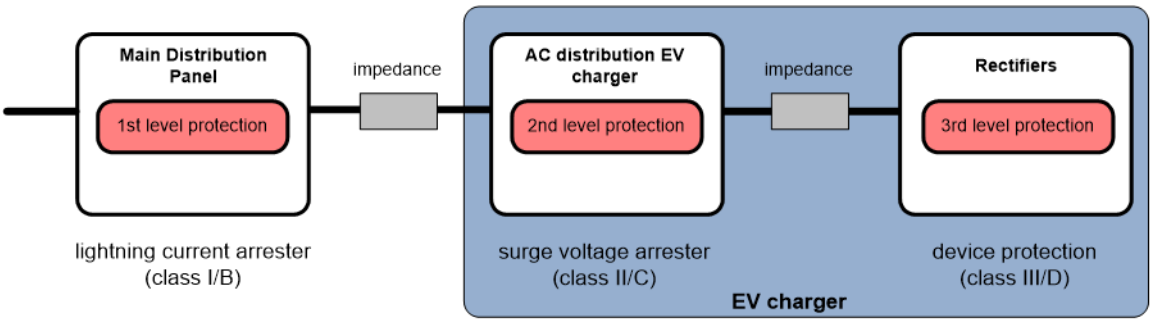


The EV Ultra fast charger contains Class II/C surge arrestor: Dehn, model DG M TNS 275

Recommended lightning protection in the main distribution panel for TN-S grid architecture:

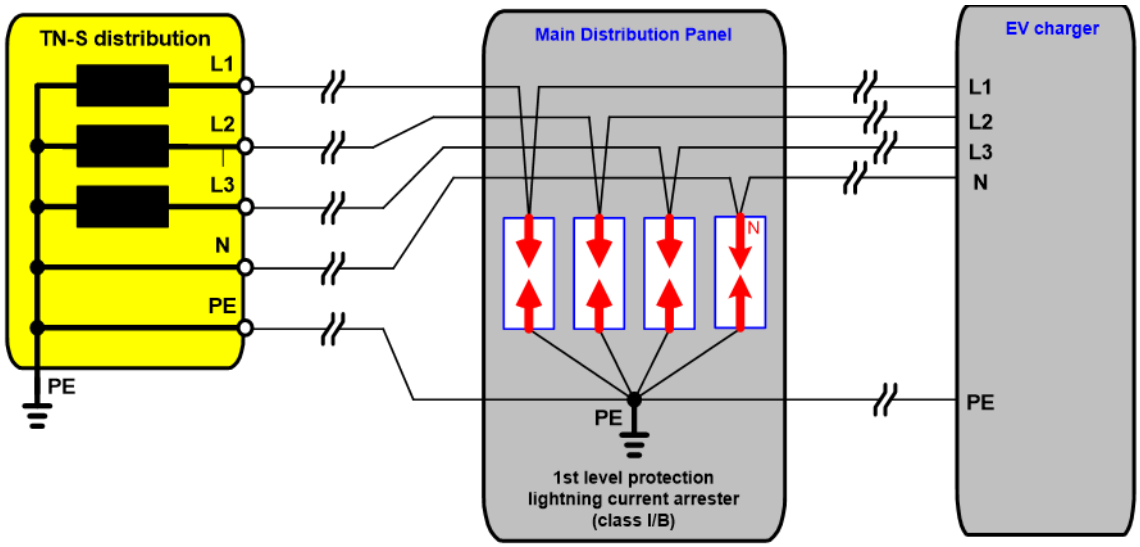


| Manufacturer | Location | Type |
|---|---|---|
| Dehn | L-PE | DPM 255 |
| | N-PE | DGP BN255 |
| Phoenix | L-PE | FLT35 CTRL-0.9 |
| | N-PE | FLT 50N/PE CTRL-1.5 |

Minimum cable length between the 1st level protection and the EV Ultra fast charger: 10 m.

# 9 Network connection

EV Ultra Fast Charger should be connected to Internet to access back office system. It can be done through integrated VPN device equipped with 3G/4G modem and LAN switch. This allows controlling chargers with management system through secured connection. Follow next points to identify solution that applies for installation site.

General rules apply for this identification:

- System should be able to access Internet from public or private IP with no blocked ports.
- Internet connection should be done based on Ethernet LAN or 3G/4G wireless connection.

The following tools are recommended for the EV Ultra fast charger installation:

- (1x) RJ45 crimping tool
- RJ45 connectors

In case above rules do not apply to your case please contact Delta for further clarification.

## 9.1 Sites with 1 EV Ultra Fast Charger

Sites with only single EV Ultra Fast Charger can use integrated device.

Integrated switch device is featured with:

- LAN 3 ports switch 10/100Mbits Ethernet
- WAN 1 port 10/100Mbits Ethernet
- 2G/3G/4G USB modem with external antenna

### 9.1.1 Ethernet connection

Site should be prepared in advance with dedicated Ethernet cable. It should be outdoor UTP Cat 5e cable. Cable ducts for communication cables should be separated from power lines. Maximum length of the cable is 100m. UTP cable should be crimped using RJ45 connectors, following Ethernet standard. Both ends of the cable should be labelled to clearly identify communication cable for EV charger.

Ethernet cable should be inserted to WAN port of integrated device. Please refer to Figure 10 and Figure 18 for detailed view.

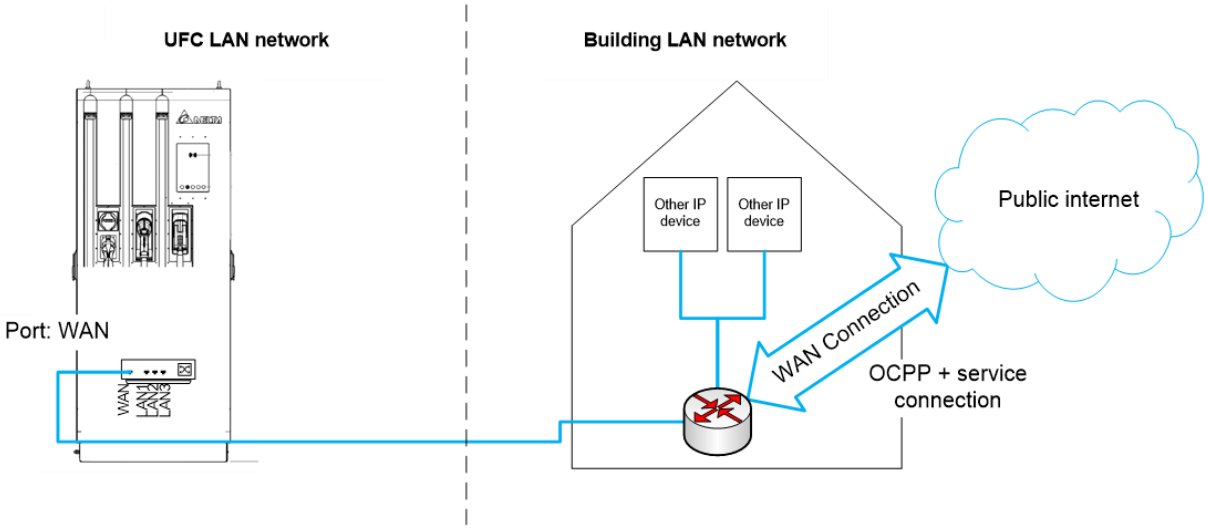


Figure 18 Wired connection scheme

**Note!** Ethernet cable plugged into LAN port or Service port (Integrated switch) does not allow proper communication. Integrated switch is running DHCP service, which can influence other networks.

## 9.1.2 Wireless connection

SIM card should be installed for wireless connection. Connection scheme is visible in below Figure 19.

The type of SIM card must be one for “Private area network”. The card size needed is mini (standard).

Install SIM card to appropriate slot in 3G/4G modem. Please refer to Step 9 and Figure 10 to for detailed instruction.

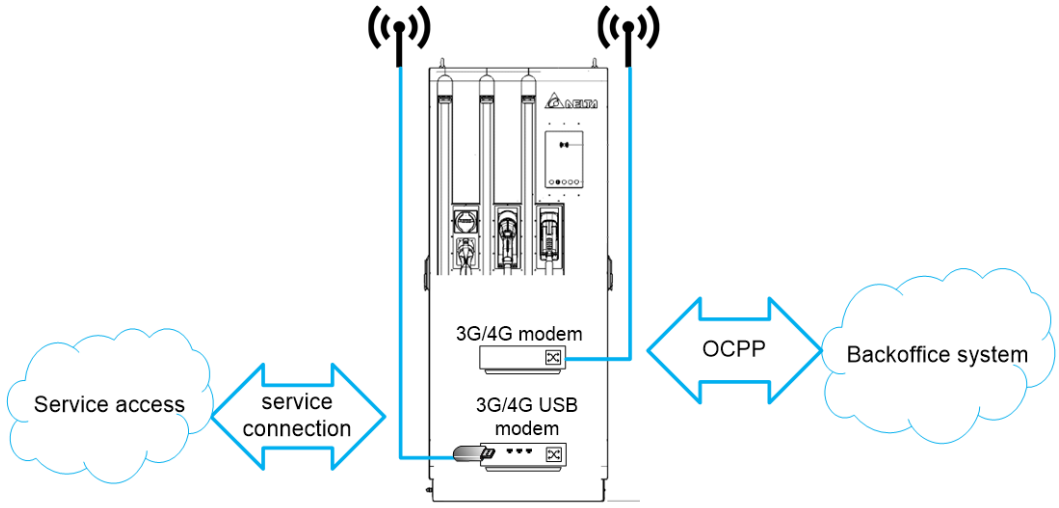


Figure 19 Wireless connection scheme

## 9.2 Sites with more EV Ultra Fast Chargers

Sites equipped with more than 1 EV Ultra Fast Chargers are based on star topology. Site should be prepared in advance with dedicated Ethernet cables for each charger. It should be outdoor UTP Cat 5e cable.

Cable ducts for communication cables should be separated from power lines. Maximum length of the cable is 100m. UTP cable should be crimped using RJ45 connectors, following Ethernet standard.

Ends of the cables should be labelled to clearly identify communication cable for each EV charger.

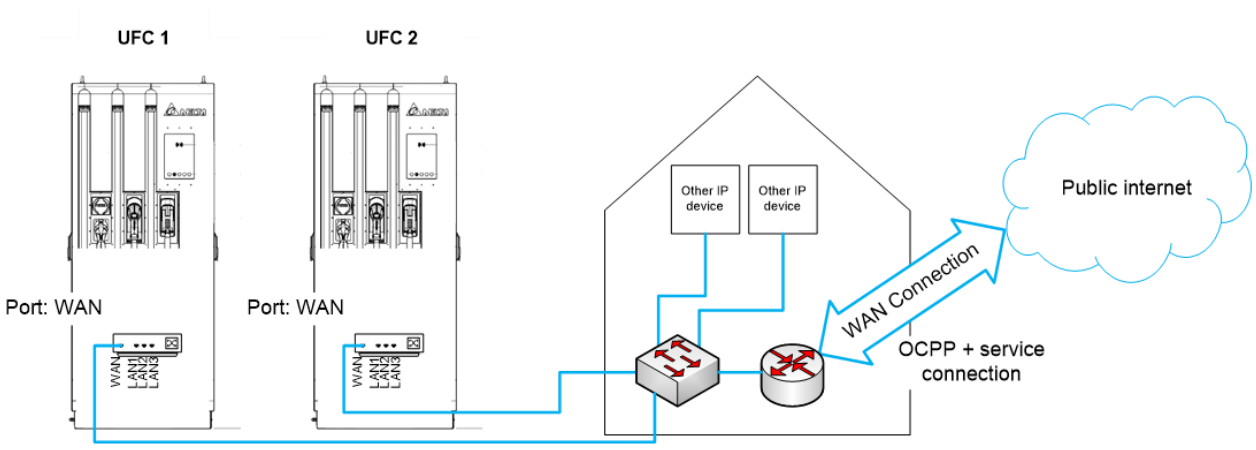


Figure 20 Connection scheme for site with more than 1 EV Ultra Fast Charger

UTP cables should be crimped using RJ45 connectors, following Ethernet standard, and plugged into WAN port in EV Ultra Fast Charger integrated switch and LAN port in router or switch that will aggregate traffic.

**Note!** Cable plugged into LAN or Service port (integrated switch) does not allow proper communication.

Connect aggregation device to public internet network using Ethernet cable or using 3G/4G modem.




Delta EMEA Service Contacts

TPS.RMA@delta-es.com
spares-emea@delta-es.com

**About Delta**

Delta, founded in 1971, is a global leader in power and thermal management solutions. Our mission is “To provide innovative, clean and energy-efficient solutions for a better tomorrow,” and our businesses encompass Power Electronics, Energy Management, and Smart Green Life. Delta has sales offices, manufacturing facilities and R&D centers worldwide. In 2014, was ranked at the highest A-level of the Climate Performance Leadership Index of the Carbon Disclosure Project (CDP). Since 2011, Delta is part of the Dow Jones Sustainability Indices (DJSI) World Index.

© 2015 Copyright Delta Electronics, Inc., All rights reserved.