SDM120 SERIES -M/-MB/-PLS

45A DIRECT CONNECT AND CT CONNECT



User Manual V1.2 2017

- Measures kWh, kVarh, kW, kVar, kVA, PF, Hz, dmd, V, A, etc.
- Bi-directional measurement IMP & EXP
- Two pulse outputs
- RS485 Modbus RTU / Mbus
- Din rail mounting 18mm
- 45A direct connect / 5A or 100mV CT Connect
- Better than Class 1 accuracy

1. Introduction

This document provides operating , maintenance and installation instructions of SDM120 series . The unit measures and displays the characteristics of single phase two wires application . It provides voltage , current , power , frequency , power factor and energy information . SDM120 series has both direct connect types and 5A or 100mV CT operated types.The direct connect type can work with direct load 45A .
Two Pulse outputs and 1 remote communication port are provided.

This series covers 7 models:

Model	Current Input	Communication	MID
SDM120M	Direct connect 45A	RS485 Modbus	●
SDM120MB	Direct connect 45A	M-Bus EN13757-3	●
SDM120P	Direct connect 45A	---	●
SDM120CTM	1A or 5A CT operated	RS485 Modbus	●
SDM120CTMB	1A or 5A CT operated	M-Bus EN13757-3	●
SDM120CTP	1A or 5A CT operated	---	●
SDM120CT-MV	100mV CT operated	RS485 Modbus	

2. Specifications

2.1 General Specifications

Voltage AC (Un)	230V
Voltage Range	176~276V AC
Current Input	0.25~5(45)A (SDM120 45A) 0.25~5(6)A (SDM120 CT)
Power consumption	<2W/10VA
Frequency	50/60Hz (50Hz only for MID version)
AC voltage withstand	4KV for 1 minute
Impulse voltage withstand	6KV-1.2uS wavform
Overcurrent withstand	30Imax for 0.01s (SDM120 45A) 20Imax for 0.01s (SDM120CT)
Pulse output rate	1000imp/kWh (default) 1000/100/10/1 imp/kWh/kVarh (configurable)
Display	LCD with white backlit
Max. Reading	99999.9kWh (SDM120 45A) 999999 kWh (SDM120 CT)

2.2 Accuracy

Voltage	0.5% of range maximum
Current	0.5% of nominal
Frequency	0.2% of mid-frequency
Power factor	1% of Unity
Active power	1% of range maximum
Reactive power	1% of range maximum
Apparent power	1% of range maximum
Active energy	Class 1 IEC62053-21 Class B EN50470-3 (MID product only)
Reactive energy	1% of range maximum

2.3 Environment

Operating temperature	-25℃ to +55℃
Storage and transportation temperature	-40℃ to +70℃
Reference temperature	23℃ ±2℃
Relative humidity	0 to 95%, non-condensing
Altitudeup to 2000m	
Warm up time	3s
Mechanical environment	M1
Electromagnetic environment	E2
Degree of pollution	2

2.4 Mechanics

Din rail dimensions	18x119x62 (WxHxD) DIN 43880
Mounting	DIN rail 35mm
Sealing	IP51 (indoor)
Material	self-extinguishingUL94V-0

3 Display

Initialization Display

When it is powered on, the meter will initialize and do self-checking.

1	8888.88	Full screen It will last for 3 seconds.
2	020 105	Software version It will last for 3 seconds.
3	Ct 100	Ct1 **(SDM120CT* only)** Primary current 1A-9999A Default: 5
4	000478	Total active energy(kWh)

After the self-checking program, the meter screen will display the total active energy (kWh)

*** Note: For the MID version of SDM120CTM, SDM120CTMB and SDM120CTP, the CT ratio can be set only once. Before you set the CT ratio, please check the ratio of the CT connected to the meter. For example, if the CT is 100/5A, please set CT1 to be 100.**

Scroll Display by button

There is a button on the front of the meter. After initialization and self-checking program , the meter display the measured values . The default page is total kWh. If the user wants to check other information, he needs to press the scroll button on the front panel.

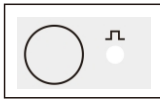	Click the button, the LCD display will scroll the measurements.
	Keep pressing the button for 3 seconds, the meter will enter set-up mode.

1	000478	Total active energy(kWh) Display format:0000.00→9999.99 →10000.0→99999.9→0000.00
1-1	000245	Import active energy(kWh) Display format:0000.00→9999.99 →10000.0→99999.9→0000.00
1-2	000232	Export active energy(kWh) Display format:0000.00→9999.99 →10000.0→99999.9→0000.00
2	219.8	Voltage (V)
3	20.18	Current (A)
4	2210.2	Active power (W)
5	F 50.00	Frequency (F)
6	PF 1.00	Power factor (PF)
7	Add001	Modbus Address or Primary address Default: 001
8	b 2400	Baudrate Default : 2400bps
9	NonE	Parity None/Even/Odd are optional Default: none
10	Ct 100	CT 1**(SDM120CT* only)** Primary current 1A-9999A Default: 5 *** Note: For the MID version of SDM120CTM, SDM120CTMB and SDM120CTP, the CT ratio can be set only once.**
11	Ct 5	CT 2**(SDM120CT* only)** Secondary current 1A or 5A ,Default: 5 For SDM120CT-MV,CT2 is fixed with 100mV
12	H 0000	M-Bus secondary address High **(M-Bus version only)**
13	L 0000	M-Bus secondary address Low **(M-Bus version only)**
14	020 105	Software version In kind prevail

The display of each model:

SDM120M: Total kWh → Import kWh → Export kWh → Voltage → Current → Active power → Frequency → Power factor → Address → Baudrate → Parity → Software version

SDM120MB: Total kWh → Import kWh → Export kWh → Voltage → Current → Active power → Frequency → Power factor → Address → Baudrate → Parity → Secondary address high → Secondary address low → Software version

SDM120P: Total kWh → Import kWh → Export kWh → Voltage → Current → Active power → Frequency → Power factor → Software version

SDM120CTM: Total kWh → Import kWh → Export kWh → Voltage → Current → Active power → Frequency → Power factor → Address → Baudrate → Parity → CT 1 → CT 2 → Software version

SDM120CTMB: Total kWh → Import kWh → Export kWh → Voltage → Current → Active power → Frequency → Power factor → Address → Baudrate → Parity → CT 1 → CT 2 → Secondary address high → Secondary address low → Software version

SDM120CTP: Total kWh → Import kWh → Export kWh → Voltage → Current → Active power → Frequency → Power factor → → CT 1 → CT 2 → Software version

SDM120CT-MV: Total kWh→ Import kWh → Export kWh → Voltage → Current → Active power → Frequency → Power factor → Address → Baudrate → Parity → CT 1 → Software version

4. Communication

4.1 Pulse Output

The meter is equipped with 2 pulse outputs, which are fully isolated from the inside circuit. That generates pulses in proportion to the measured energy. The pulse outputs are polarity dependent , passive transistor output requiring an external voltage source for correct operation. For this external voltage source, the voltage shall be 5-27V DC, and the maximum input current shall be 27mA DC.

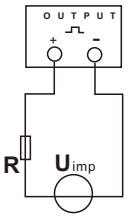

ATTENTION:Pule output must be fed as shown in the wiring diagram below.Scrupulousil respect polarities and the connection mode. Opto-coupler with potential-free SPST-NO Contact.

Contact range:5～27VDC Max.current
Input:27mA DC

4.2 Pulse Output 1 (SDM120M/ MB/CTM/CT-MV/CTM only)

Pulse output 1 is configurable. The pulse output 1 can be set to generate pulses to represent total / import/ export kWh or kVarh. The pulse constant can be set to generate 1 pulse per: 0.001 (default) / 0.01 /0.1 /1kWh /kVarh.
Pulse width: 200 / 100/ 60ms (default)

4.3 Pulse Output 1 (SDM120P and SDM120CTP only)

Pulse output 1 is non-configurable. It is fixed up with Export kWh.
The constant is 1000imp/kWh.

4.4 Pulse Output2

Pulse output 2 is non-configurable. It is fixed up with Import kWh. The constant is 1000imp/kWh.
The Pulse width: 60ms

4.5 RS485 output for Modbus RTU (SDM120M and SDM120CTM/CT-MV only)

The meter provides a RS485 port for remote communication. Modbus RTU is the protocol applied. For Modbus RTU, the following RS485 communication parameters can be configured from the Set-up menu.
Baud rate: 1200, 2400, 4800, 9600
Parity: NONE/EVEN/ODD
Stop bits:1 or 2
Modbus Address: 1 to 247

4.6 M-Bus communication EN13757-3 (SDM120MB and SDM120CTMB only)

The meter provides an M-Bus port for remote communication. The protocol fully comply with EN13757-3.The following communication parameters can be configured via M-bus communication. Baud rate: 300,600, 2400, 4800, 9600
Parity: NONE/EVEN/ODD
Stop bits:1 or 2
M-Bus network primary address: nnn – 3 digits number from 001 to 250
M-Bus network secondary address: 00 00 00 00 to 99 99 99 99

Please contact us for the detailed Modbus/M-Bus communication protocol.
sales@eastrongroup.com

5. Dimensions

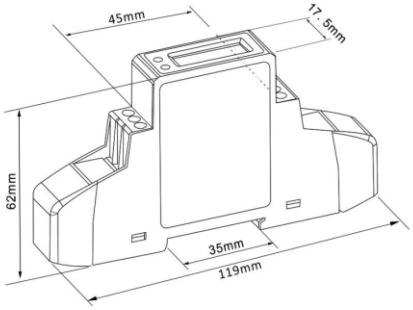

6. Installation

6.1 Safety instruction

Information for your own safety

This manual does not contain all of the safety measures for operation of the equipment(module,device),because special operating conditions,and local code requirements or regulations may necessitate further measures. However,it does contain information which must be read for your personal safety and to avoid material damages.This information is highlighted by a warning triangle and is represented as follows, depending on the degree of potential danger.

Warning
This means that failure to observe the instruction can result in death, serious injury or considerable material damage.

Caution
This means hazard of electric shock and failure to take the necessary safety precautions will result in death,serious injury or considerable material damage.

Qualified personnel

Operation of the equipment (module, device) described in this manual may only be performed by qualified personnel. Qualified personnel in this manual means person who are authorized to commission, start up, ground and label devices,systems and circuits according to safety and Regulatory standards.

Proper handling

The equipment (device, module) may only be used for the application specified in the catalogue and the user manual,and only be connected with devices and components recommended and approved by EASTRON.

- Use only insulating tools.
- Do not connect while circuit is live (hot).
- Place the meter only in dry surroundings.
- Do not mount the meter in an explosive area or expose the meter to dust, mildew and insects.
- Make sure the used wires are suitable for the maximum current of this meter.
- Make sure the AC wires are connected correctly before activating the current/voltage to the meter.
- Do not connect the meter to a 3 phase - 400VAC - network.
- Do not touch the meter connecting clamps directly with your bare hands, with metal, blank wire or other material as you may get an electrical shock.
- Make sure the protection cover is placed after installation.
- Installation, maintenance and reparation should only be done by qualified personnel.
- Never break the seals and open the front cover as this might influence the functionality of the meter, and will avoid any warranty.
- Do not drop, or allow physical impact to the meter as there are high precision components inside that may break.

6.2 Installation

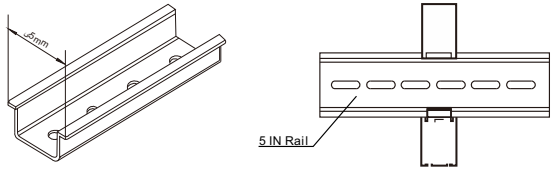

6.3 Wiring diagram

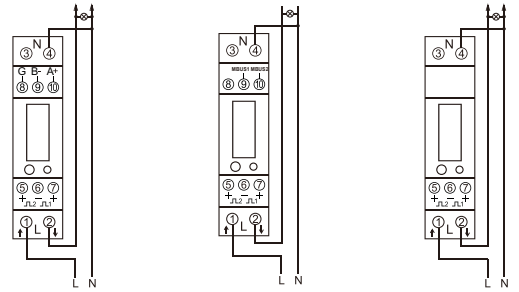

7. Declaration of Conformity (for the MID approved version meter only)

We Zhejiang Eastron Electronic Co., Ltd. declares under our sole responsibility as the manufacturer that the single phase multifunction electrical energy meter SDM120 series correspond to the production model described in the EU-type examination certificate and the requirements of the Directive 2014/32/EU. Type examination certificate number 0120/SGS0141. Identification number of the Notified Body: 0120.

Zhejiang Eastron Electronic Co. , Ltd.
No 1369. Chengnan Rd. Jiaxing,
Zhejiang, China
Tel:86 573 83698881/83698882
Tel:86 573 83698883
Email:sales@eastrongroup. com
Web:www.eastrongroup. com

CE RoHS MID