※ Thanks for selecting the EPEVER LiFePO4 battery; please read this manual carefully before using the product.

※ Do not use the product in humid, salt spray, corrosion, greasy, flammable, explosive, dust accumulative, or other severe environments.

※ Please reserve this manual for future review.

LiFePO4 (LFP) Battery

LFP5.12KWH25.6V-P65L2GF40

Important Safety Instructions

Work and storage precautions:

a) Please store the battery in a cool and dry place. Keep the battery away from corrosive, explosive, and insulating gases or conductive dust, as well as away from sources of fire, heat, and high voltage. It is forbidden to immerse the battery in water and keep children out of reach of the battery. No static electricity exists (static electricity can easily damage the battery protection circuit and cause battery damage).

b) Fix the battery securely in a reasonable environment, and connect the connector reliably to avoid arcs and sparks caused by the contact friction.

c) Handle the battery gently to avoid vibration, collision, and pressure shock. Otherwise, it may cause battery short circuit, resulting in high temperature and fire.

d) Do not short-circuit the battery, and do not disassemble the battery to avoid danger.

e) Please keep the battery in a half-charge state (40%~80% SOC is preferred). Please use non-conductive materials to wrap the battery to avoid direct contact with metal, which may cause damage to the battery.

f) Dispose of discarded batteries safely and do not put them in fire or liquid.

Hazard warning:

a) It is strictly forbidden to crush, drop, collide, puncture, burn, or other destructive acts on the battery.

b) Do not disassemble the battery. Improper disassembly may damage the battery's protection function, causing battery deformation, heating, smoking, or burning.

c) Do not short-circuit the battery. Connecting the battery's positive and negative poles with conductive materials, storing and transporting the battery together with conductive materials are prohibited.

d) Do not heat or burn batteries. Otherwise, it will cause the melting of battery components, loss of safety functions, or electrolyte combustion. Overheating can cause the battery to deform, generate heat, produce smoke, or catch fire.

Emergency treatments:

a) Avoid skin and eye contact with the electrolyte when it leaks. In case of contact, immediately wash with plenty of water and seek help from a doctor. It is forbidden for any person or animal to swallow any part of the battery or the substances contained in the battery.

b) If the battery is severely deformed or electrolyte leakage occurs, the battery should be placed in an explosion-proof box or open space when conditions permit; personnel should evacuate quickly.

c) If the battery catches fire during use or storage, use a high-pressure water gun to extinguish the fire while ensuring personal safety.

d) If the battery catches fire during the charging process, turn off the charger power first and then take the next step to extinguish the fire.

Series/parallel connection warning:

a) Prerequisite: Before connecting, ensure that each battery has been fully charged individually and simultaneously.

b) Capacity note: It may be observed that the usable capacity of the battery pack after series and/or parallel connection is less than the sum of the individual cells' nominal capacities. This is a normal characteristic.

c) Consistency requirement: Only batteries of the same batch and identical specifications must be used.

Appearance

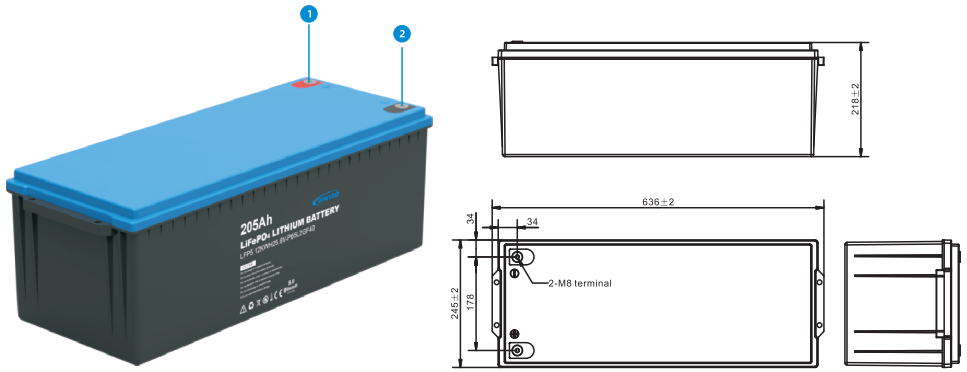

1 Lithium battery positive terminal

2 Lithium battery negative terminal

Charging Operation

1. General Checking.

- Check thoroughly including all the cables for showing no damages.
- Make sure the mains supply complies with the specification of the charger and the battery.

2. Turn off the charger and connect it to the battery.

WARNING: Check the battery polarity before connecting to the charger. It is forbidden to reverse connect the battery.

3. Connect the charger to mains supply and turn on the charger.

- **Standard charge:**

First, charge the battery to 28.8V with a constant current of 41A (0.2C), and then charge to 10.25A (0.05C) with a constant voltage of 28.8V .

Note: All tests stated in this document shall be performed at 25±2℃.

Discharging Operation

1. Before discharging, ensure the load and equipment are in the off state.

2. Connect the battery to the load and equipment correctly.

WARNING: Check the battery polarity before connecting to the load and equipment. It is forbidden to reverse connect the battery.

3. Turn on the load and equipment.

- **Standard discharge:**

After the battery is standard charged, discharging the battery with a constant current of 41A (0.2C) till the battery voltage drops to 20.8V.

Connect in series/parallel

- **Connect in series (at most 4 pcs)**

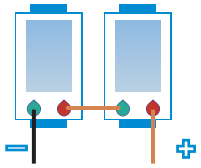

- **Connect in parallel (at most 4 pcs)**

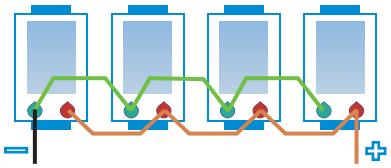

WARNING: When the batteries are connected in series or parallel, measure the battery voltage with a multimeter. The battery voltage shall be consistent or the voltage difference is less than 0.2V (it is normal if there is a slight spark during the parallel connection). It is forbidden to connect the battery in series/parallel when the battery voltage exceeds this range.

Disclaimers

- **Please use the LFP batteries under the product specification. It may cause fire or expansion if the batteries are used incorrectly.**
- **We will not guarantee the performance and safety unless the batteries are used under the product specification.**
- **Improper use or storage of batteries resulting in poor performance is not covered by the warranty.**
- **When the battery cycle life meets the requirements of the specification, the battery will expire prematurely.**
- **Serious battery discharge due to long-term storage and lack of maintenance.**
- **Faulty battery connection or short circuit resulting in BMS damage.**

Xiaoxiang Electric App

1. The Xiaoxiang Electric APP is a lithium battery management application independently developed. The APP primarily displays: curves of lithium battery voltage, current, capacity, temperature, etc.; charge and discharge switch control; SOC, battery voltage, charge and discharge current, protection status, basic parameters, etc. Through background permission operations, parameters of the lithium battery protection board can also be set, making the health status of the lithium battery more transparent and ensuring its usage safety. According to market feedback, the upgraded version of Xiaoxiang Electric APP has optimized the overall interface, adopted a modular layout, and added more parameters and function settings, all aimed at bringing users a faster, more complete, and enhanced experience.

2. Account Registration:

After the Xiaoxiang Electric App is successfully installed, open it and allow it to enable Bluetooth and obtain location information. The app will then automatically pop up the account registration page. Please enter your mobile phone number as required, set your password, and click "Confirm" to finish.

3.Binding / Unbinding an Account:

3.1 Binding a Device

When connecting via Bluetooth for the first time, the app will automatically pop up a dialog box asking whether to bind this device. Click "OK" to bind it. Modifying parameters requires obtaining setting permissions, which need background (administrative) consent. Once a battery is bound, other users cannot connect to it.

3.2 Unbinding a Device

Enter the "My" interface, select the device you need to unbind, and click "Unbind". One account can be bound to multiple devices.

Android-client

IOS-client

Specifications

Model	LFP5.12KWH25.6V-P65L2GF40
Battery Type	LiFePO4
Nominal Voltage	25.6V
Nominal Capacity	205Ah
Energy	5248Wh
Charge Cut-off Voltage	28.8V
Discharge Cut-off Voltage	20.8V
Maximum Charge Current	100A
Maximum Discharge Current	200A
Recommend Discharge Current	100A
AC Internal Resistance	≤15mΩ（@AC 1KHz）
Cycle Life	>6000 times(0.5C charge&discharge 80%DOD @25℃)
Function	1.Bluetooth 2.Low-Temperature Heating：（<5℃：Heating only； 5℃~15℃:Heating and charging； >15℃：Charging only）
Number of series/parallel	Max 2 battery packs in series/Max 4 battery packs in parallel
Certification	UN38.3 MSDS IEC62619 CE-RED ROHS
Operating Temperature	Charge：0℃~+50℃；Discharge：-20℃~+60℃
Storage Temperature Range	-5℃~+0℃/35℃~+45℃（≤2 months） 5℃~+35℃（≤3months,optimum storage temperature） 15℃~+35℃（≤6 months）
Recommended storage humidity	40%~80%
Connect Terminal	M8
Dimension (L x W x H)	636mm*245mm*218mm
Net Weight	40.7±0.5KG
IP Class	IP65
Warranty	See lithium battery limited warranty

①When the battery is stored for more than 3 months, the storage voltage should be maintained at 26~26.8V.
②For long-term storage, charge at least once every 3 months (no less than 30 minutes@0.2C).

HUIZHOU EPEVER TECHNOLOGY CO., LTD.
TEL: +86-752-3889706 Website: www.epever.com

Any changes without prior notice! Version number: V1.3