Remote Meter

USER MANUAL



MT91

EN

Contents

1. Safety Instructions 1
2. Overview 2
3. Appearance 3
4. Installation Instructions 6
5. Button Instruction 7
6. Real-time Interface 8
7. Setting Interface 9
8. Error Codes 17
9. Specifications 18
10. Dimension 19

1. Safety Instructions

- Thanks for selecting the MT series; please read this manual carefully before using the product.
- Please keep this manual for future reference.
- When you receive the product, check whether there is any damage that occurred in transportation. Contact the transportation company or our company in time for any problem.
- Please read this manual and safety information carefully before installing it.
- Keep the product away from rain, exposure, severe dust, vibration, corrosion, and intense electromagnetic interference.
- Please avoid water, and other liquids enter into the product.
- There are no user-serviceable parts inside the product. Do not disassemble or attempt to repair it.

2. Overview

MT91 is a new generation of remote meters specially designed for the EPEVER inverters. It displays the real-time parameter of the inverter on one screen. Supporting parameter configuration by the button operations, which makes the product suitable for different requirements.

Features

- Dual interface design, friendly connection with the EPEVER inverter and other optional modules
- LCD screen, real-time dynamic display of system data
- Visually error codes, timely notification of warnings and faults
- Load ON/OFF button to control the load output directly
- Simple installation and friendly operation interface

3. Appearance

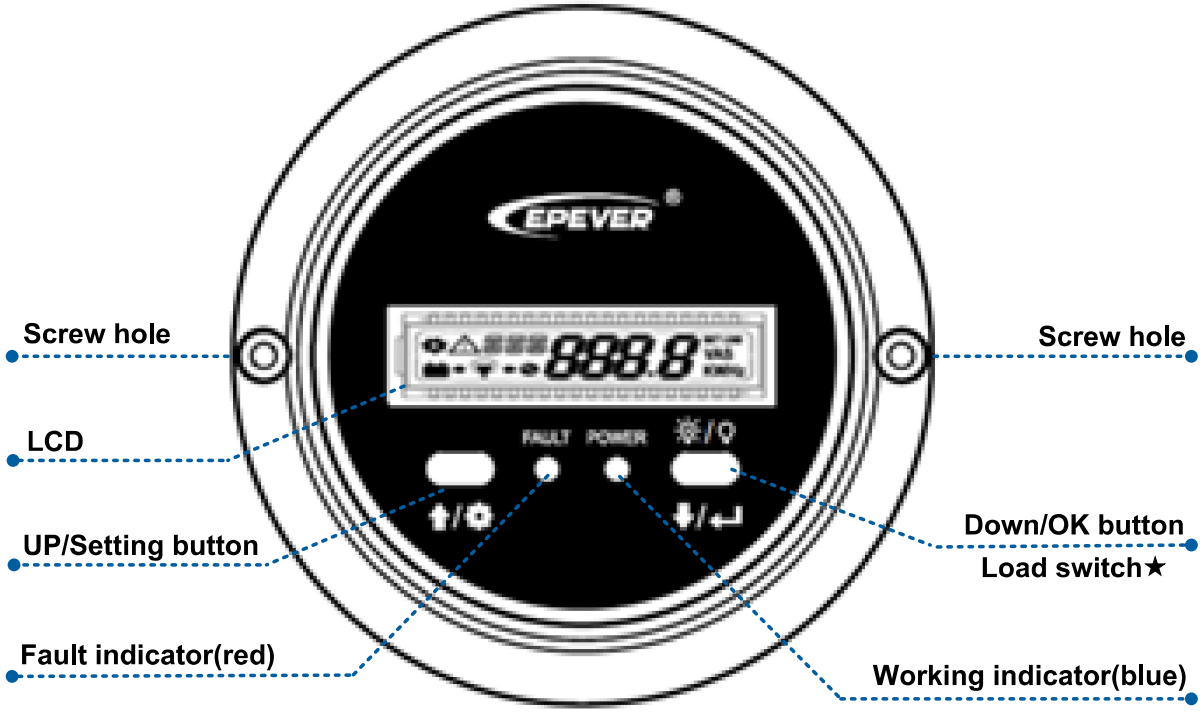

★In the real-time interface, long press  for 2 seconds to turn off the load(default on); long-press it again for 2 seconds to turn on the load.

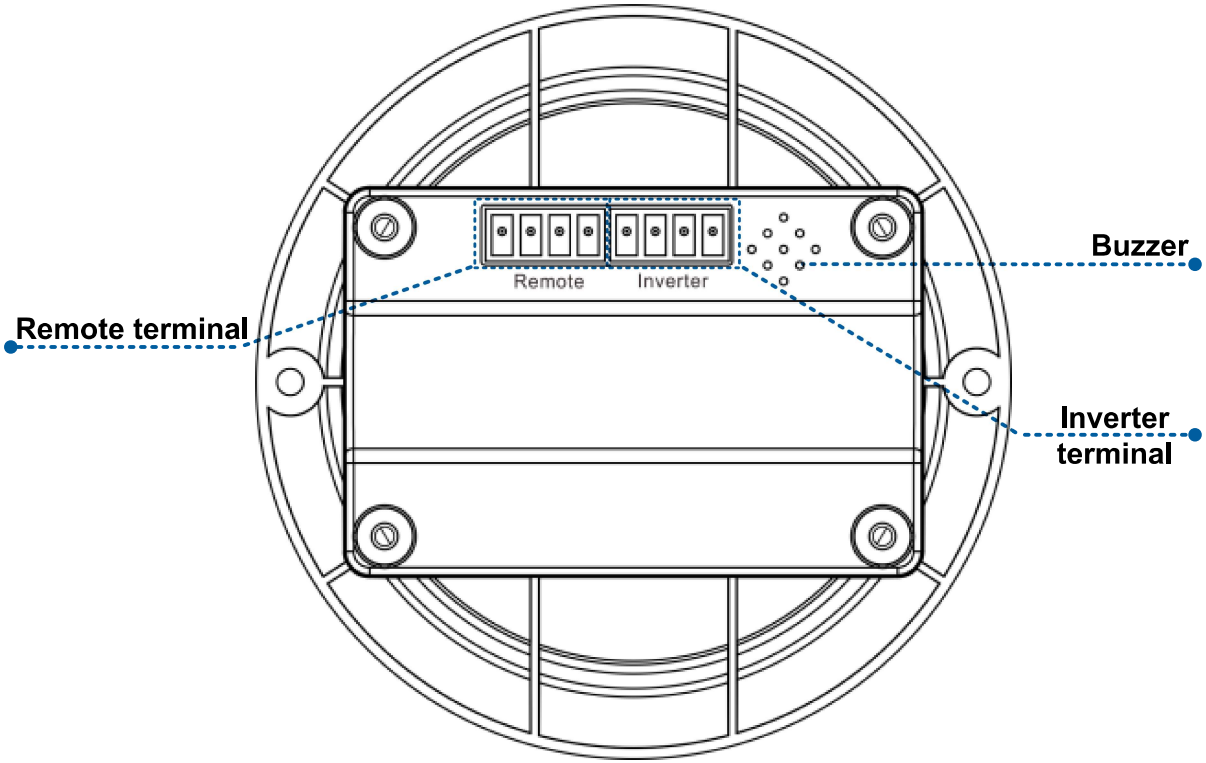

- **Definition of the inverter terminal/remote terminal:**

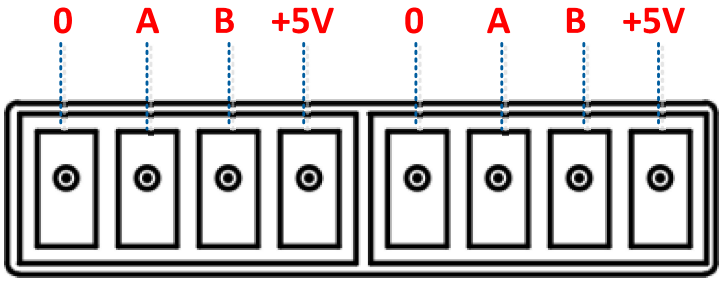

- **Connect the MT91 with an inverter:**

  Connect the MT91's "inverter terminal" and the inverter's RJ45 port through an RS485 communication cable (included accessory, model: CC-RJ45-3.81-100U. The cable length can be customized according to customers' actual requirement.)

- **Connect the MT91 with an auxiliary module**

  Connect the "remote terminal" of the MT91 and the auxiliary modules such as the Bluetooth module/wireless module/BMS through an adapter cable.

4. Installation Instructions

Surface mounting installation is recommended.

Step 1: Locate based on the installation size (91mm) and drill two screw holes (no smaller than 77x52mm).

Step 2: Use two PWM3*10 screws to fix the remote meter.

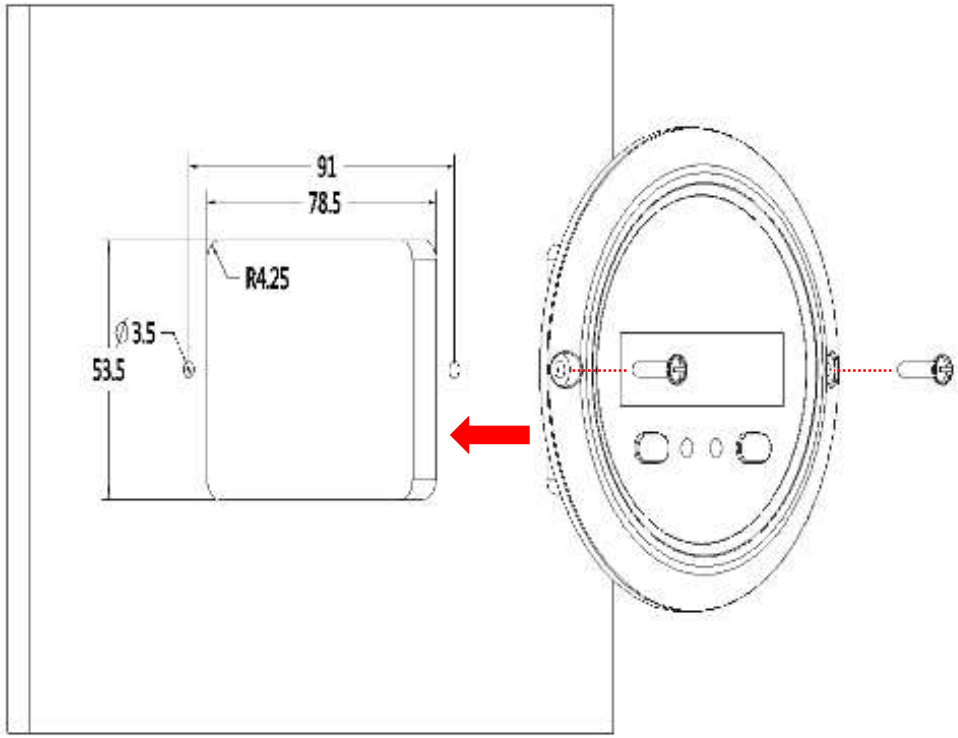

5. Button Instruction

Button	Operation	Instruction
	Click	Move up/parameter increase
	Press for 2s	• In the real-time interface (that is, the default interface after the device is powered on), press it for 2s to enter the setting interface. • In the setting interface, press it for 2s to enter the specific parameter configuration interface.
	Click	Move down/parameter decrease
	Press for 2s	• In the real-time interface, press it for 2s to turn on/off the load output (default on, press it for 2s to turn off the load output). • In the setting interface, press it for 2s to confirm the parameter configuration.
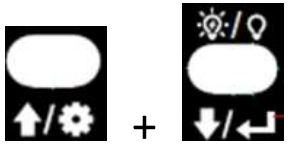	Click	In the setting interface, click them to exit the parameter configuration interface.
	Press for 2s	In the real-time interface, press them for 2s to clear the faults.

Long beep for parameter confirming and short beep for other operations.

6. Real-time Interface

In the real-time interface(namely, the default interface after the device is powered on), please click  or  to display the below parameters in a cycle.

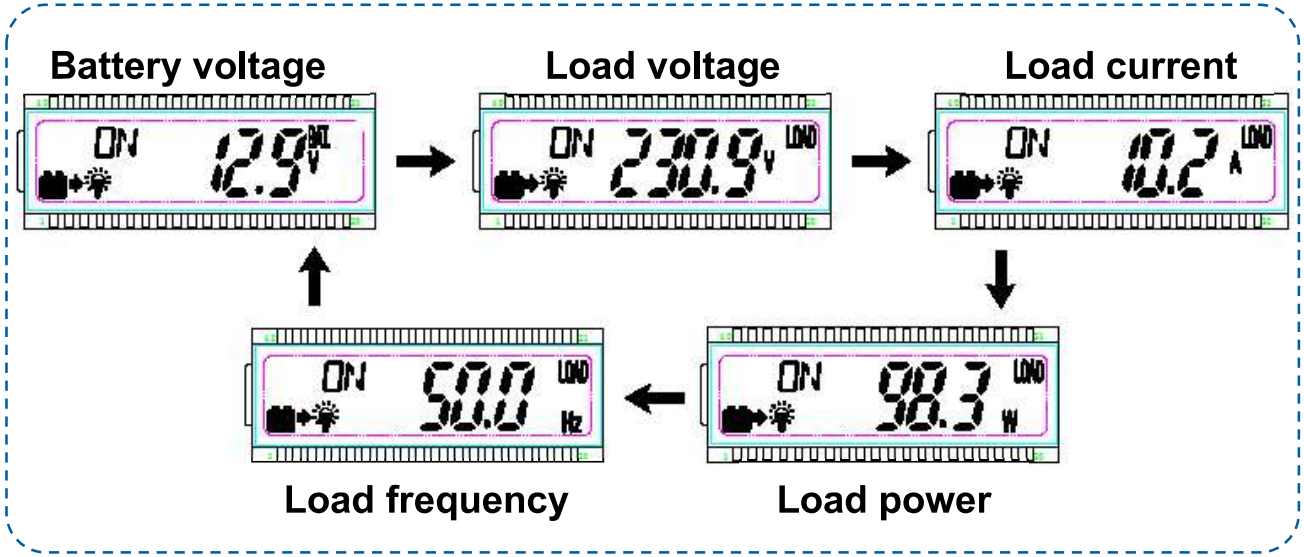

Note:  means the load being ON status,  means the load being OFF status.

7. Setting Interface

- **Parameter configuration**

Step1: In the real-time interface, press  for 2s to enter the parameter setting interface.

Step2: Click  or  to select the parameter to be configured.

Step3: Press  for 2s to enter the configuration interface of the specified parameter. The parameter value will be flashing.

Step4: click  or  to configure the parameter value.

Step5: Press  for 2s to confirm the configuration.

Step6: Click  +  to exit the current interface.

- **Power Saving Mode**

Users can enable the power saving mode and set the PSI/PSO value by the  /  button (The minimum power step is 1VA).

When the actual load power is lower than the PSI (the power to enter the power saving mode), the system will automatically switch to the power saving mode, and then the device output is turned on for 1s and turned off for 5s.

When the actual load power exceeds the PSO (the power to exit the power saving mode), the inverter will automatically exit the power saving mode and resume work.

1) Enable power saving mode (PSE)

Step1: In the real-time interface of the remote meter, press and hold the  button to enter the parameters setting interface.

Step2: Click the  or  button to select the PSE parameter.

Step3: Press and hold the  button until the PSE parameter (OFF default) flashes.

Step4: Click the  or  button to set the PSE status.

- Select ON to enable the power saving mode.
- Select OFF to disable the power saving mode.

Step5: Press and hold the  button to confirm.

2) Set the power to enter the power saving mode (PSI)

Step6: In the parameters setting interface, click the  or  button to select the PSI parameter.

Step7: Press and hold the  button until the PSI value flashes.

Step8: Click the  or  button to set the PSI parameter.

- Click the  button to decrease the PSI value by 1.
- Click the  button to increase the PSI value by 1.
- Press and hold the  button to increase the PSI value by 10. After ten operations, the PSI value will increase by 100 each time. When the  button is released, press and hold it again to repeat the above operation (**Note: The setting parameter cannot exceeds the user define, or it will back to the initial value to start the loop**).

Step9: Press and hold the  button to confirm.

3) Set the power to exit the power saving mode (PSO)

Step10: In the parameters setting interface, click the  or  button to select the PSO parameter.

Step11: Press and hold the  button until the PSO value flashes.

Step12: Click the  or  button to set the PSO parameter.

- Click the  button to decrease the PSO value by 1.
- Click the  button to increase the PSO value by 1.
- Press and hold the  button to increase the PSO value by 10. After ten operations, the PSO value will increase by 100 each time. When the  button is released, press and hold it again to repeat the above operation (**Note: The setting parameter cannot exceeds the user define, or it will back to the initial value to start the loop**).

Step13: Press and hold the  button to confirm.

- **Parameters user define**

Display	Parameters	Default	User define
VPT	Output voltage class①	220VAC	220VAC/230VAC/240VAC
		110VAC	100VAC/110VAC/120VAC
FRE	Output frequency class①	50Hz	50Hz/60Hz
BLT	LCD backlight time	30s	30s/ 60s/100s(ON solid)
PSE	Power Saving Enable	OFF	ON/OFF
PSI	Power Saving In	20VA	20VA ~ (20%*rated power)
PSO	Power Saving Out	40VA	(20VA + PSI) ~ (50%*rated power)
BRS	Baud Rate Select	115200	9600/115200

LVD	Low voltage disconnect voltage②	12V: 10.8V 24V: 21.6V 48V: 43.2V	12V: 10.5V~14.2V; step size 0.1V 24V: 21V-30.2V; step size 0.1V 48V: 42V-62.4V; step size 0.1V
LVR	Low voltage reconnect voltage②	12V: 12.5V 24V: 25V 48V: 50V	12V: 11.5V~15.2V; step size 0.1V 24V: 22V-31.2V; step size 0.1V 48V: 43V-63.4V; step size 0.1V
OVR	Over voltage reconnect voltage②	12V: 14.5V 24V: 29V 48V: 58V	12V: 11.5V~15.2V; step size 0.1V 24V: 22V-31.2V; step size 0.1V 48V: 43V-63.4V; step size 0.1V
OVD	Over voltage disconnect voltage②	12V: 16V 24V: 32V 48V: 64V	12V: 12.5V~16.2V; step size 0.1V 24V: 23V-32.2V; step size

			0.1V 48V: 44V-64.4V; step size 0.1V

① After configuring the parameters marked with ①, the inverter will restart automatically. It will resume work according to the new parameter value.

② NPower and IPower-Plus series support the modification of parameters marked with②. Please refer to the following rules for the modification; otherwise, the parameter setting will not succeed. IPower does not support modification of parameters marked with②.

- **Rules for battery protection voltage**

A. Over voltage limiting voltage(16.2/32.2/64.4V) ≥ Over voltage disconnect voltage ≥ Over voltage reconnect voltage +1V.

B. Over voltage reconnect voltage ≥ Low voltage reconnect voltage.

C. Low voltage reconnect voltage ≥ Low voltage disconnect voltage +1V.

D. Low voltage disconnect voltage ≥ Low voltage limiting voltage(10.5/21/42V).

- **Detail status is shown as the following when reaching the protection voltage point.**

Input voltage protection	Status
Over voltage protection	The output is switched OFF. The blue indicator fast flashes. Buzzer beeps. LCD displays the ⚠IOV.
Over voltage reconnect	The blue indicator is ON solid. The output voltage is normal.
Low voltage protection	The output is switched OFF. The blue indicator slowly flashes. Buzzer beeps. LCD displays the ⚠ILV.
Low voltage reconnect	The blue indicator is ON solid. The output voltage is normal.

Note: Although the inverter is designed with the over voltage protection function, the surge voltage is not higher than 20V for the 12V system, not higher than 40V for the 24V system, and not higher than 80V for the 48V system; otherwise, the inverter may be damaged.

8. Error Codes

Error code	Faults	Buzzer	Working indicator	Fault indicator
⚠OTP	Inverter over temperature Heat sink over temperature	5 beeps	OFF	ON solid
⚠IOV	Input over voltage	5 beeps	Fast flashing (1Hz)	OFF
⚠ILV	Input low voltage	5 beeps	Slowly flashing (1/4Hz)	OFF
⚠OSC	Output short circuit	5 beeps	OFF	Fast flashing (1Hz)
⚠OOL	Output overload	5 beeps	ON solid	Slowly flashing (1/4Hz)
⚠OVA	Output voltage abnormal	5 beeps	OFF	OFF

9. Specifications

Model	MT91
Compatible products	IPower-Plus, IPower/NPower①
Power supply	5VDC
Power supply method	Inverter communication port
LCD visual angle	12' clock
LCD backlight	Yes
Installation method	Surface mounting installation
Self-consumption	14mA/5V(no backlight) 23mA/5V(backlight)
Environment temperature	-20℃～+60℃
Storage temperature	-35℃～+70℃
Dimension	100 x 19.4mm
Mounting size	100 x 50mm
Mounting hole size	Φ3.5mm
Net Weight	65g

① IPower-Plus supports MT91 whole functions, while IPower/NPower supports part MT91 functions; for detail supported functions, refer to user manual.

10. Dimension

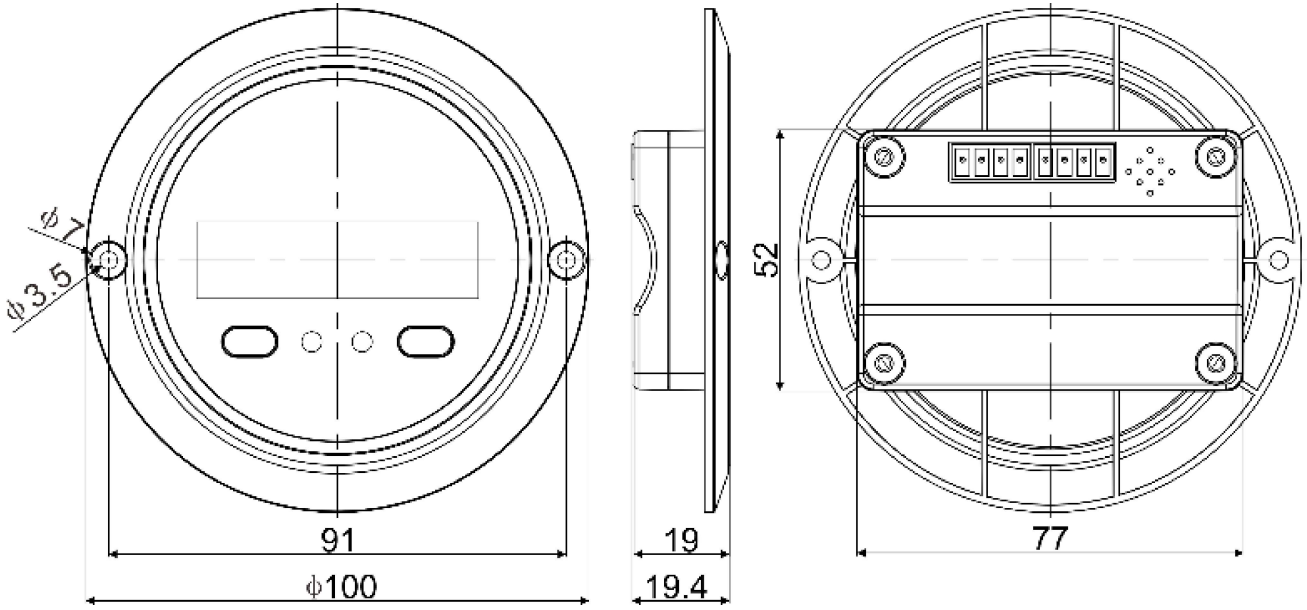

Any changes without prior notice! Version number: V1.2

HUIZHOU EPEVER TECHNOLOGY CO., LTD.

Beijing Tel: +86-10-82894896/82894112

Huizhou Tel: +86-752-3889706

E-mail: info@epever.com

Website: www.epever.com