# 船用推进器

## 用户手册

## OWNER'S MANUAL

Should your motor be defective or a technical issue arise, please contact the local Haswing distributor for assistance. Visit www.haswing.com for the list of country distributors.

适用于/Suitable for:

50736-12V/55lbs、50737-24V/80lbs、50738-36V/101lbs

# Cayman B / with GPS

# To The Owner

Thank you for selecting a Haswing electric outboard motor.It's designed for the purpose of superior performance,portability and environmental contribution.Enjoy using the Haswing Cayman B/with GPS!

This Owner's Manual contains important information pertaining to installation,correct operation and maintenance.Please read the manual before using this motor.If you have any questions contact your local Haswing distributor in the country of porchase.

★ We welcome comments regarding product improvement.

To avoid hazards and to obtain maximum performance and usage,special symbols are noted in this manual.

警告 WARNING — Failure to follow the instructions could cause severe injury.

注意 CAUTION — Special precautions must be taken to avoid damage to the motor.

注 NOTE — Information that makes the procedures easier and faster.

# 致用户

感谢您选购“汉飞”所生产的电动船用推进器。其具有低噪音、无污染、操作性强、方便携带等优点，充分满足广大船舶爱好者的需求。我们衷心希望您能尽情体验水上娱乐的美好时光。

本用户手册包含正确安装，操作，保养等重要说明。为让推进器操作顺畅，建议用户在使用前应彻底理解手册上的内容及重要事项。如对手册上的操作或维护事项有所疑问，请咨询汉飞客户中心。

★ 为提高产品质量，我们欢迎广大用户给予评价及改进建议。

为确保操作顺畅，防止意外发生，在用户手册及产品上注有特别符号信息。符号类别如下：

警告 WARNING — 表示如不遵守指示可能导致操作人员及他人严重受伤。

注意 CAUTION — 表示必须采取特殊措施以免推进器损坏。

注 NOTE — 表示使程序更容易，更快捷地完成。

# Contents

**Product features** ····· 2

**Before operating** ····· 3

**Installation**

❶ Installating the propeller ····· 3-4
❷ Installating the fin ····· 4
❸ Mounting the motor ····· 5
❹ Battery connection ····· 5

**Read this page before install**

**How to operate the motor** ····· 6-9

**Audio Pattern** ····· 9

**Trouble shooting** ····· 9

**Maintenance** ····· 10

**Electric Circuit Diagram** ····· 10

**Package contents** ····· 17

# 目录

**部件图** ····· 2

**注意事项** ····· 11

**安装**

❶ 螺旋桨安装 ····· 11-12
❷ 电机鳍安装 ····· 12
❸ 推进器的安装 ····· 12
❹ 电源安装 ····· 13

**首次安装前必阅**

**推进器操作方式** ····· 13-16

**蜂鸣模式 & 故障与修复 & 维护与保养** ····· 16

**推进器电路图** ····· 10

**装箱清单** ····· 17

# 主要部件说明
# Product features

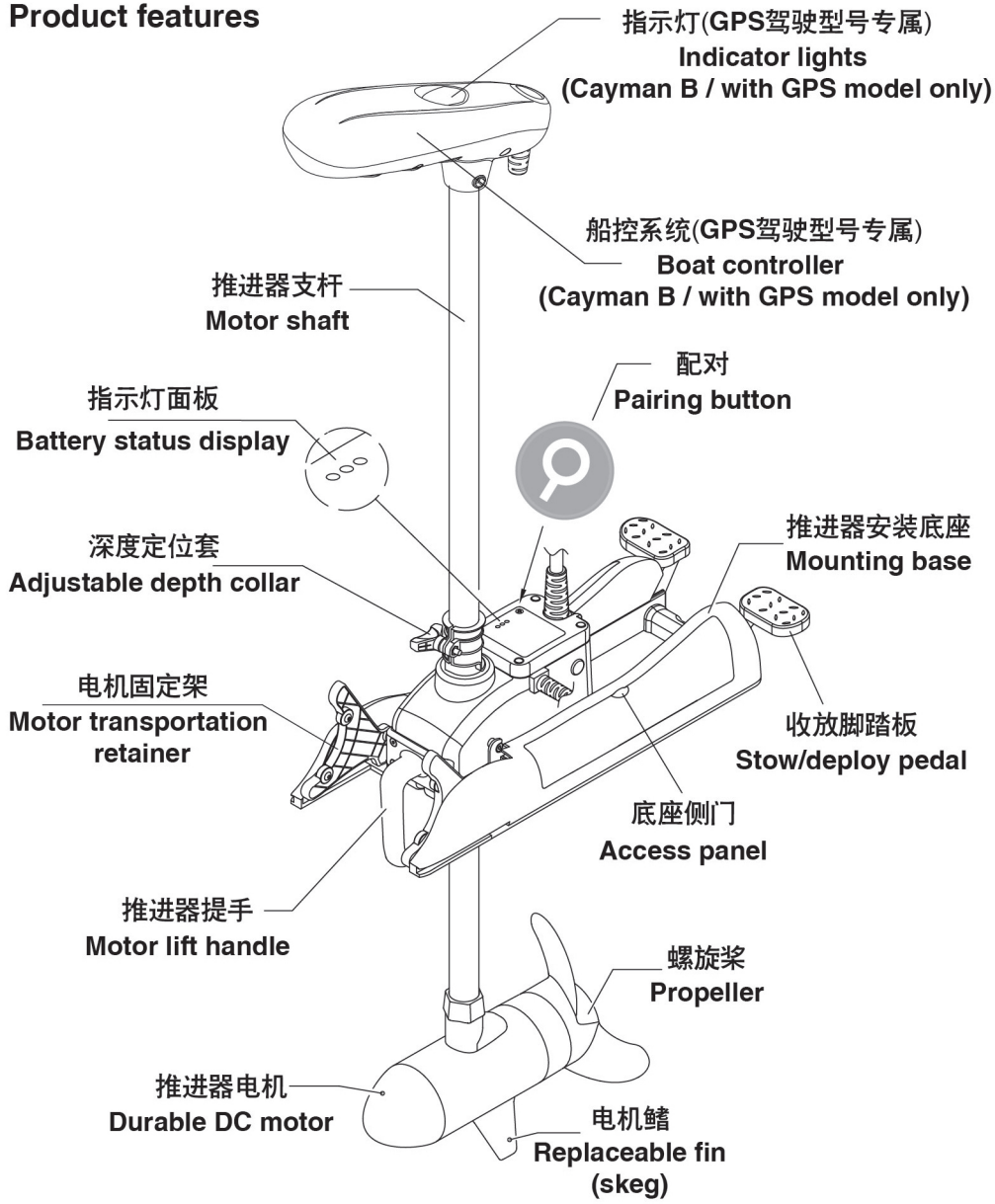


为提高该产品质量，我方保留对产品的更改权利。
We reserve the right to change parts without notice.

## Before operating the motor

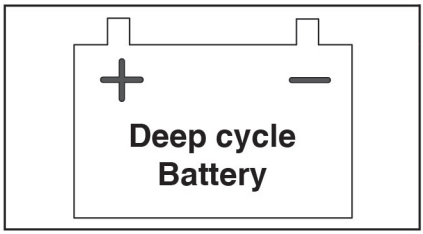


Only use deep cycle battery or batteries to power the motor. Incorrect or improper use, or connection of the battery could cause damage to the motor. Disconnect the battery when stowing the boat or not using for an extended period.

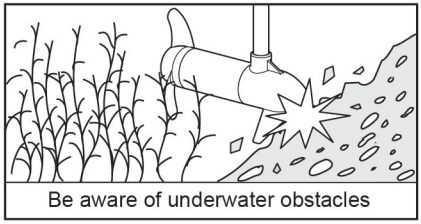
Be aware of underwater obstacles

When motoring with the electric trolling motor in shallow water or around obstacles, reduce speed. Raise or retract the motor when in shallow water. Be aware of swimmers in close proximity to your vessel.

注意 CAUTION IP68 waterproof level for the motor
IP63 waterproof level for all but the motor

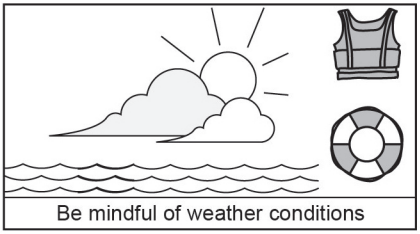
Be mindful of weather conditions

Always wear an approved life vest or PFD (personal flotation device) and comply with local boating regulations.

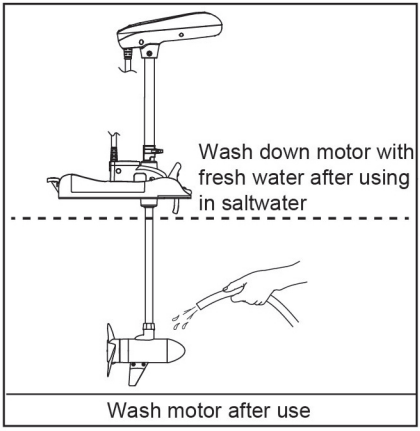

Wash motor after use

Remove any debris from around the propeller or propeller drive shaft. Wash with freshwater after using in saltwater.

## ❶ Propeller installation

1.Install the drive pin (drive pin and cross-shaped slot in the propeller must align in order to correctly fit the propeller to the motor), anode, washer and self-locking nut onto the drive shaft. (Fig. 1)

注 NOTE The cross-shaped slot (2 slots) allow the user to re-assemble the propeller if one slot is worn.

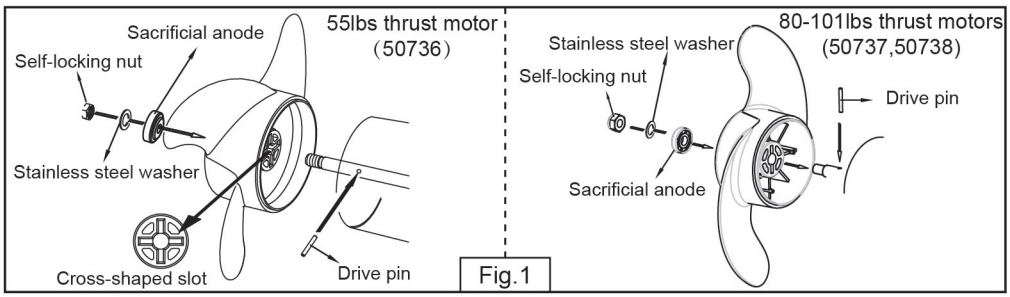

Fig.1

2.Hold the propeller to prevent it from rotating and use the propeller wrench to tighten the propeller nut until firm. Do not over-tighten. (Fig. 2)

注 NOTE Only use the supplied propeller wrench to tighten, other tools may cause over-tightening resulting in damage. TIP: Keep this hand wrench in your boat in the event that you get debris such as fishing line around the propeller shaft.

注意 CAUTION Tighten the nut 1/4 turn past the 'snug' point. Over-tightening can cause damage to the propeller.

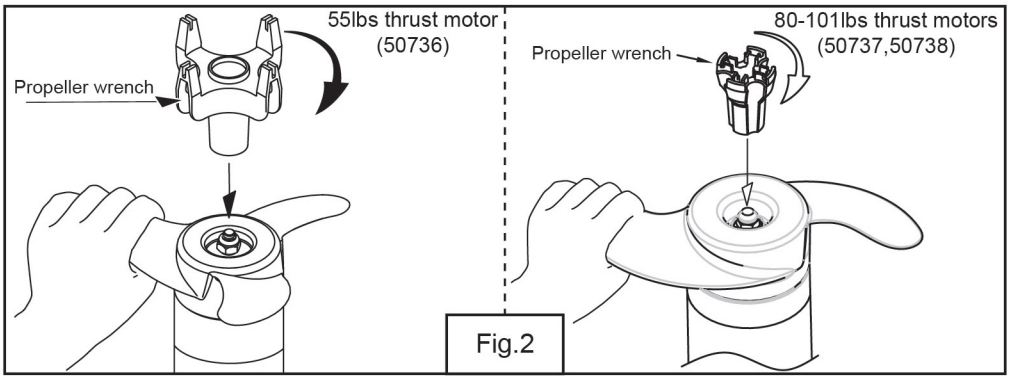

Fig.2

## ❷ Installating the lift handle and fin

警告 WARNING Ensure that the motor is disconnected from the battery before installing components.

注 NOTE Nuts, bolts and fin supplied in plastic bag.

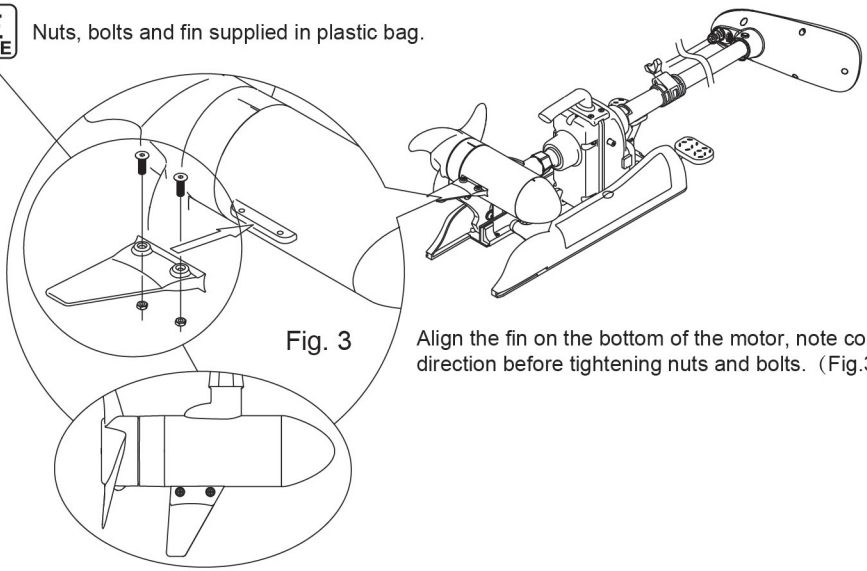
Fig. 3

Align the fin on the bottom of the motor, note correct direction before tightening nuts and bolts.（Fig.3）

## ❸ Mounting the motor

⚠ 警告 WARNING Ensure that the battery is not connected when initially installing or when mounting the motor using the Quick Release Bracket. If not using the motor for extended period or when storing the vessel, disconnect the battery.

Installation method

The motor can be bolted directly to the boat OR if using the Quick Release Bracket, bolt the puck to the boat. It is recommended to mount the motor so it is longitudinal with the boat or on a slight angle. This will also depend whether your boat has an electric motor mounting plate.（Fig.4）

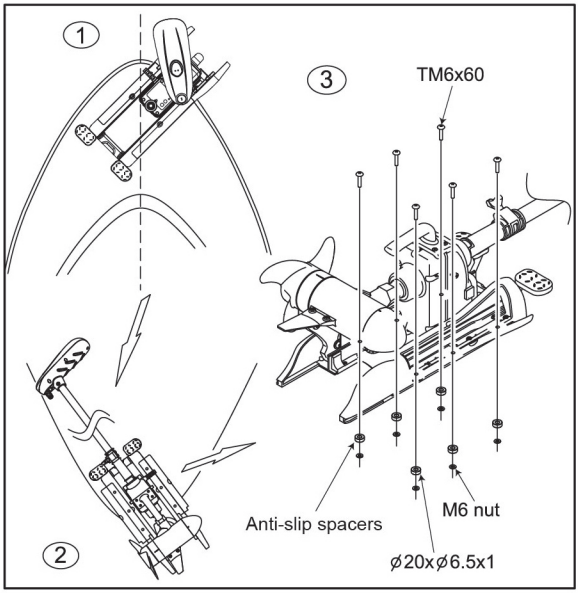


Fig.4

## ❹ Battery connection

Only use a deep cycle battery of the correct voltage for the motor. Lead acid technology and lithium technology batteries are both suitable. Incorrect battery voltage or connection could damage the motor's electronics.

Connect the battery (+) to the positive (red) terminal, (-) to the negative (black) terminal. The ring connector should always be in the bottom most location with any washer sitting above the ring connector and then the nut. (Fig. 5)

Always make sure that the battery or batteries are secured and free from contact with metal objects to prevent shorting out. A battery box is recommended. Lead acid technology batteries such as AGM may require ventilation.

⚠ 警告 WARNING

Always disconnect the motor from the battery when recharging the battery. Failure to do so could damage the motor's electronics.

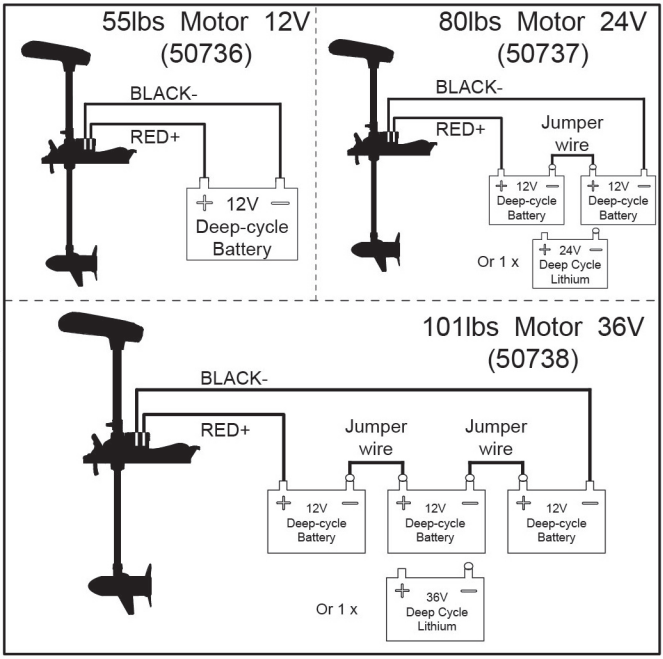


Fig.5

## Correct operation of the motor

### 1.Deploying and stowing the motor

Deploying the motor

Press the stow/deploy foot pedal and gently lower the motor taking care to align the lower part of the Depth Collar with the Steering Collar. (Fig. 6)

Stowing the motor

Press the stow/deploy foot pedal, grab the handle, head or shaft of the motor, lift and retract , sliding back horizontally until the motor clicks into the cradle.

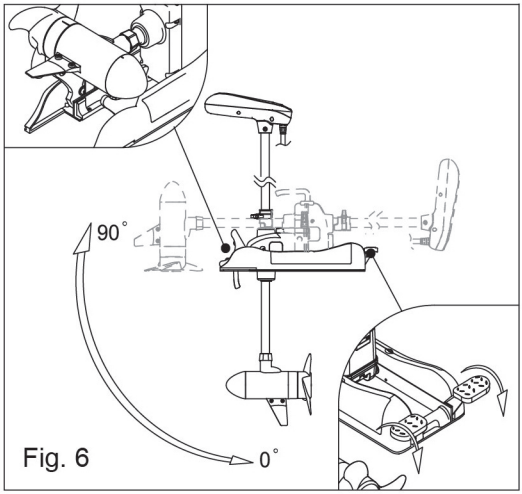

Fig. 6

警告 WARNING When raising or lowering, keep fingers clear of all hinges and pivot points.

警告 WARNING The shaft of the Cayman slides smoothly making it easy to deploy and stow. Do NOT let the motor free-fall when deploying, but gently lower into position,otherwise damage can occur to the Steering Collar.

### 2.Adjusting the motor's depth

Whilst holding the motor by the shaft to prevent it from accidentally sliding, loosen the nut on the Depth Collar and lower the motor to the required depth. Tighten the nut to secure. (Fig. 7)

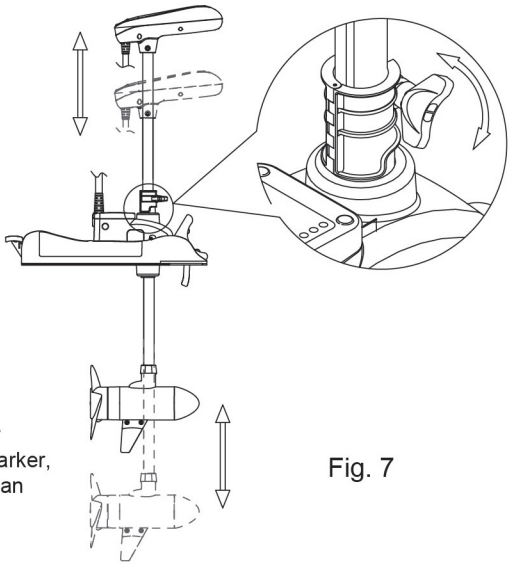
Fig. 7

警告 WARNING

When towing the boat with the trolling motor in place, ALWAYS lock the Depth Collar against the gearbox and support the shaft near the head.

SUGGESTION

When first using the motor, find the correct depth for general fishing conditions and using a permanent marker, place at mark at the top of the Depth Collar so you can easily set the depth when you next go fishing.

## 3. Remote control buttons

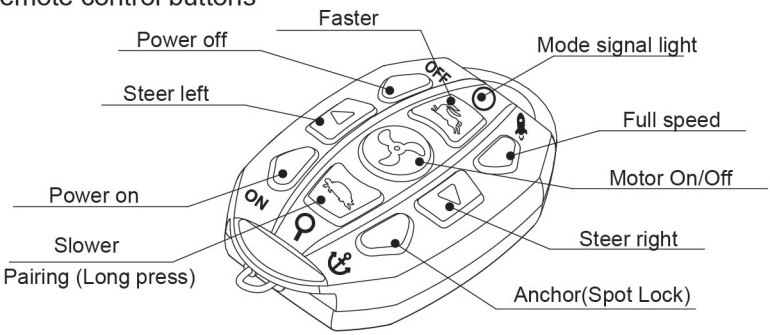


## 4. Pairing remote to motor

Press and hold below the battery status lights on the motor (Fig. 8) and (also the Slower button) on the remote at the same time for three (3) seconds or until you hear 3 beeps indicating that connection has been made and the remote and motor are paired. Release fingers from both buttons.

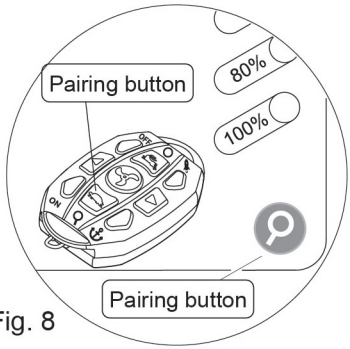


Fig. 8

## 5. Mode signal light

1.Press the “ON” button, indicator light is on solid or flashes, remote control is on “standby” state.

2.Press any button on the remote control, red indicator light flashes, indicating signal is sending.

3.Select button, light is two-tone pink/purple, indicating motor is in the anchor (spot lock) mode.

4.Press “OFF” button to turn of remote control. Light is now off.(Fig. 9)

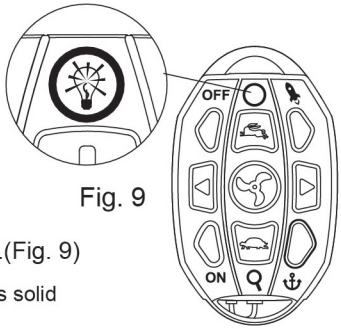


Fig. 9

NOTE If your press the “ON” button and there is no indicator light or is solid red, please recharge the remote control as the battery is flat.

## 6.Speed control

Press to activate the motor. Press or to adjust the motor’s speed. To stop the motor, press to cancel. (Fig. 10)

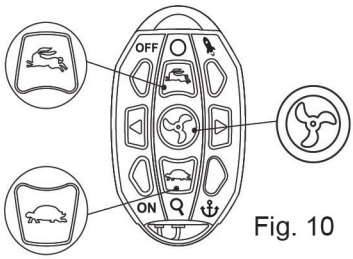


Fig. 10

## 7.Steering control

Press ◁ or ▷ to steer the motor direction left or right. (Fig. 11)

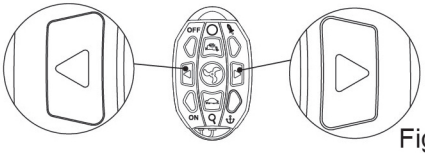

Fig. 11

## 8.Full speed

Press 🚀 to select full speed (turbo mode). Pressagain to return to the prior speed setting. (Fig. 12)

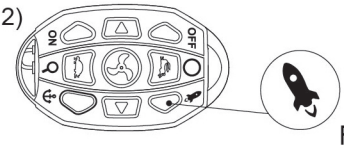

Fig. 12

## 9.Spot lock (anchor mode)

Press ⚓ to select spot lock (anchor) function to anchor the boat in position. Press ⚓ again to disengage anchor function, will return the motor to the stop mode. Press ✳ and 🐢 to select speed. (Fig. 13)

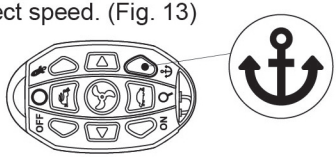

Fig. 13

## 10. Lanyard

For your convenience the lanyard can be configured to suit your preference ie around the neck or use the carabiner to clip to a belt loop. (Fig. 14)

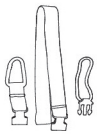

Fig. 14

## 11. Charging the remote

1. To charge the remote, remove the waterproof plug, connect the USB charging cable. The USB end of the cable has a charging status light - red light indicates charging, green light indicates charged.

NOTE: When charging the hand remote for the firsttime, the light will turn green fairly quickly, leave it charging overnight or for several hours. Only ever use the charging cable supplied with the remote, use of an incorrect cable can damage the battery and electronics of the remote.

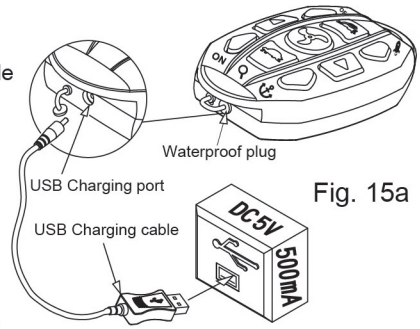


Fig. 15a

2. The hand remote can on average be used continuously for 48 hours. You can have the remote plugged into a USB charging port (if your vessel has one fitted) and still use the remote to command the Cayman motor. (Fig. 15a)

3.If you want,you can buy our item:#59915 DC Adapter (as Fig.15b) to charge the remote and smartphone.(Fig.15c)

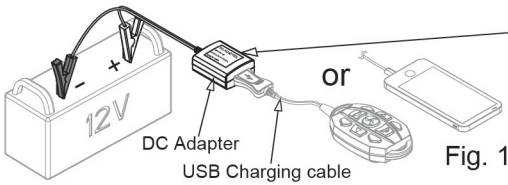


Fig. 15c

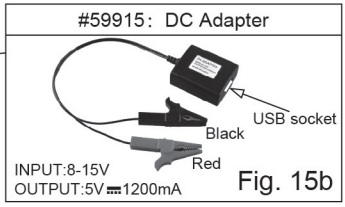


Fig. 15b

## 12. Battery Status Display

The motor has a Battery Status Display (3 LED lights) to show the charge status of the battery being used to power the Cayman motor. As the voltage of the battery discharges, the status light percentage will decline accordingly. It is highly recommended that you recharge the battery once it reaches 20% for lead acid technology batteries.Lithium batteries contain a BMS (battery management system) that actively manages the battery and when it reaches its maximum depth of discharge (DoD) the battery will automatically shut off. (Fig. 16)

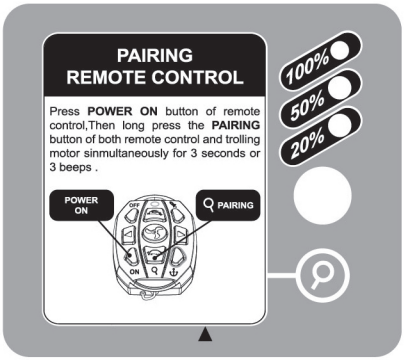


Fig. 16

When used with lithium batteries the battery status display is not entirely accurate due to the nature of discharge of lithium battery technology.

# Trouble shooting

## 1. Motor fails to run or lack of power

Make sure that the power cable from the battery is connected correctly.

Check that the terminals are clean and corrosion free.

Make sure that the battery is full. If flat or low voltage, please recharge.

Make sure that there is no fishing line or weeds caught up in the propeller. Please detach and clean up the propeller if there is debris got caught up inside the propeller. Warning - Make sure the motor is disconnected from the battery.

**Audio Warning Pattern**

| AUDIO PATTERN | STATUS |
|---|---|
| One (1) beep | Operation signal |
| Two (2) beeps | Function terminated or returned to the original setting |
| Three (3) beeps | Pairing successful |
| Five (5) beeps | System ready |
| Continuous | Low battery warning |
| Continuous long beep | Current overload |

★ For all other malfunctions not listed above,please contact Haswing customer service center.

★ Make sure that the propeller drive pin is in good condition.

## 2. Motor vibration

Make sure that the propeller is installed correctly. Inspect the propeller and the drive/shear pin condition and if necessary,replace worn or faulty part.

Disconnect the battery cable and examine the motor by manually turning the propeller. The propeller should turn freely with some magnetic resistance. If there is strong resistance, there may be internal damage. If locked up or excessive resistance, please contact our customer service or the dealer.

## 3. Operation error warning signal

A continuous beep indicates a power output overload. It can happen if the motor is trying to propel a vessel of too greater weight capacity or has weed or fishing line has caught up under the propeller around the propeller or drive spline.

When the voltage of the battery is too low, the motor will shut off automatically to help protect

## Maintenance

1.Wash and clean the motor and propeller thoroughly after use, especially after use in saltwater. Whilst the motor is manufactured for use in saltwater, proper care and maintenance is highly recommended to ensure years of trouble-free operation.Improper use or surface corrosion is not covered by warranty. (Refer page 3)

2.Remove any debris such as weed from around the propeller or propeller drive shaft after every use. (Refer page 3 “Cleaning Motor”)

3.Apply suitable lubricant to the turning parts regularly and use the correct tools to fasten parts if required.

4.Regularly apply corrosion prevention spray to help protect your motor.

5.Store the motor in a dry, well ventilated place. The motor can be stored in almost any position, as there is not fuel to worry about leaking.

6.Do not crush or put heavy items on top of the motor.

7.This product is designed for outdoor use only.

8.This motor is designed for outdoor amusement only.Continuous long distance transport is not permitted.

## 推进器电路图

## Electric Circuit Diagram

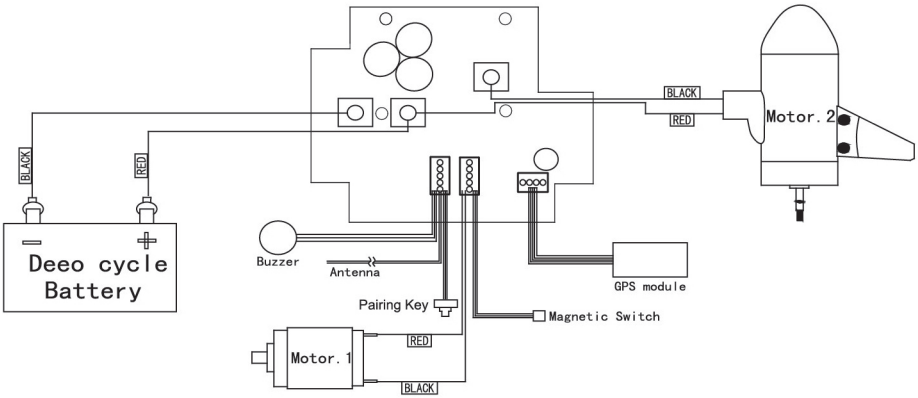

# 操作注意事项

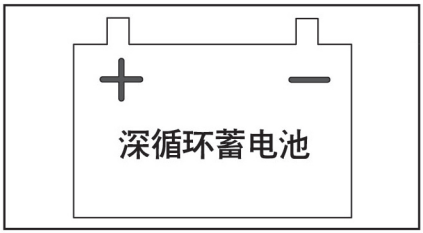


请使用深循环蓄电池；使用电压不符或不稳定的蓄电池可能会导致电机或电池的损坏。
请勿在岸上接通电源或启动电机，以防意外发生。

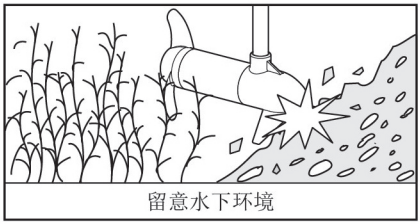


当船只进入浅水区或靠岸时，请关闭电机减慢航速，调整推进器与水面的角度，以免电机碰撞受损。
推进器运行时要留意游泳者以及周围环境。

注意
CAUTION

推进器防水性能：
整机：IP63；
电机部分：IP68。

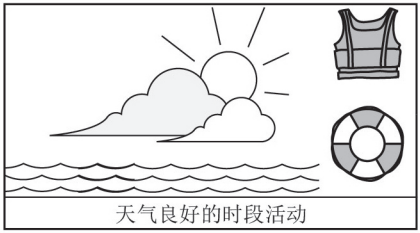


用户应选择天气良好的时段活动，活动时应配备个人救生衣。

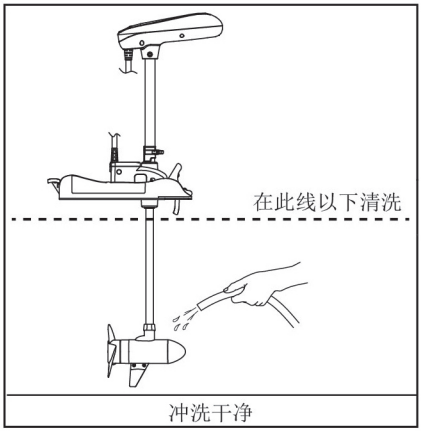


使用推进器后应清理螺旋桨上的杂物，用清水冲洗推进器。特别在海水中使用后要彻底冲洗干净。

## ❶ 螺旋桨安装

1.首先将螺旋桨固定销以水平方向穿进电机轴销孔内，再把螺旋桨装入电机轴上（螺旋桨背面的销槽必须与固定销对正装合）最后把阳极片、不锈钢垫片和螺母安装入电机轴上。（如图. 1）

注 NOTE 螺旋桨背面共有两个固定槽口，如损坏其一，用户可卸下螺旋桨更换至另一个固定槽口。

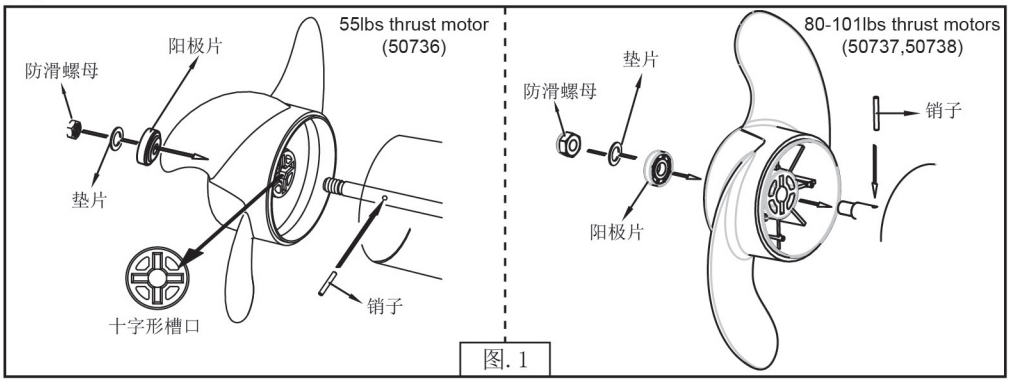


图. 1

2. 用手握住螺旋桨叶的一端以防转动。用专用扳手使螺母固定螺旋桨。（如图. 2）

注 NOTE 请使用我司提供的专用工具作安装用途。（切勿使用其他不恰当的工具以免损坏配件）

注意 CAUTION 安装螺旋桨时应适当拧紧螺母（当螺母贴底后再上紧1/4圈）。过度的紧配会使螺旋桨及固定销损坏。

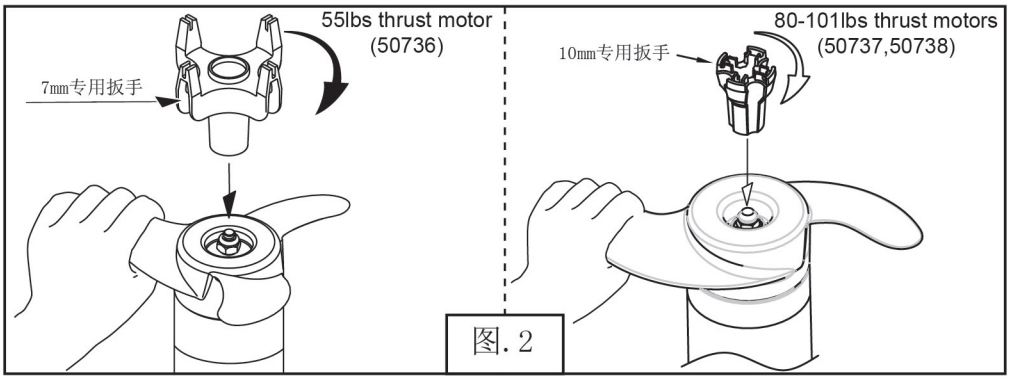


图. 2

## ❷ 提手及电机鳍安装

警告 WARNING 在安装零件前必须断开电源。

注 NOTE 电机鳍与螺丝同装在一个袋内。

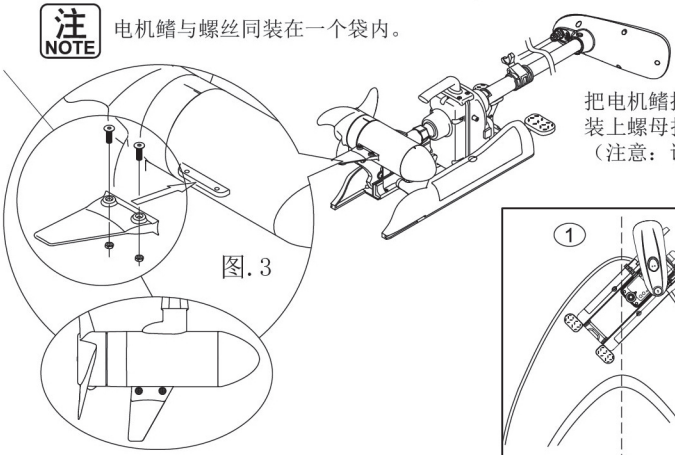

图. 3

把电机鳍插进电机上的固定位置对准螺丝孔装上螺母打上螺丝固定。
（注意：请按图示进行装配。如图. 3）

## ❸ 推进器的安装

警告 WARNING 请勿在安装及卸载推进器时接通电源或启动电机，以防意外发生。

请将推进器定位在船头板的中段位置，并用安装螺丝固定。（图. 4）

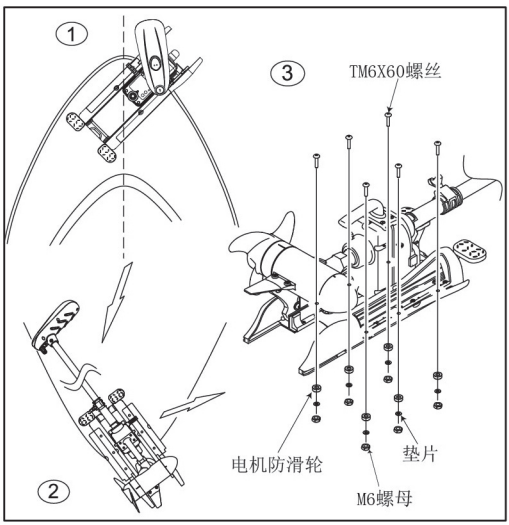


图. 4

## ❹ 电源安装

选择合适电源—请使用深循环蓄电池。使用电压不符或不稳定蓄电池可能导致电机或电池的损坏。

连接电源—请将红色（+）正极电源线末端连接至电池的正极处（+），黑色（-）负极电源线末端连接至负极处（-）并固定。（如图.5）

把电池放置在通风干爽的位置。

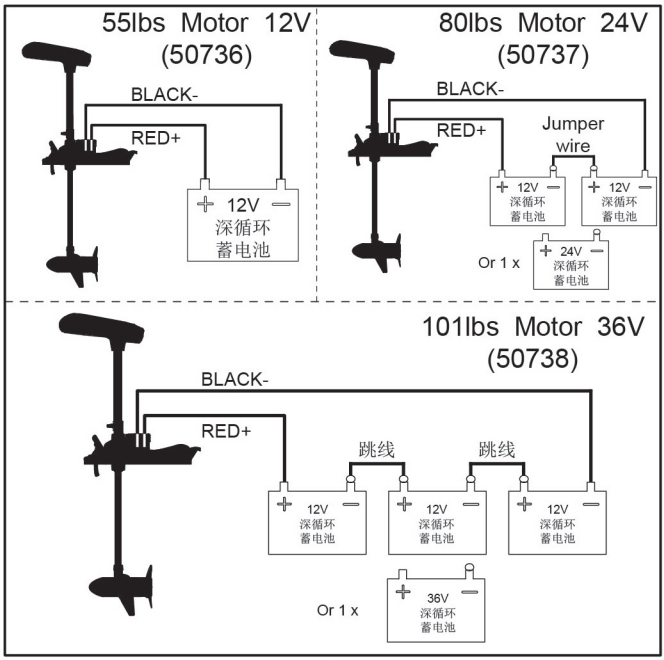


图. 5

## 操作方式

1. 推进器的收与放操作

投放推进器

踏下收/放脚踏板并将电机投放入水中至0度，连续“蜂鸣短响5声”推进器开机。（如图.6）

收回推进器

握住推进器的支杆并同时踏下收/放脚踏板，提起电机至90度并将其扣入电机固定架上推进器关机。（如图.6）

警告 WARNING 在推进器的收与放操作中，请勿把手放进机械旋转关节处。

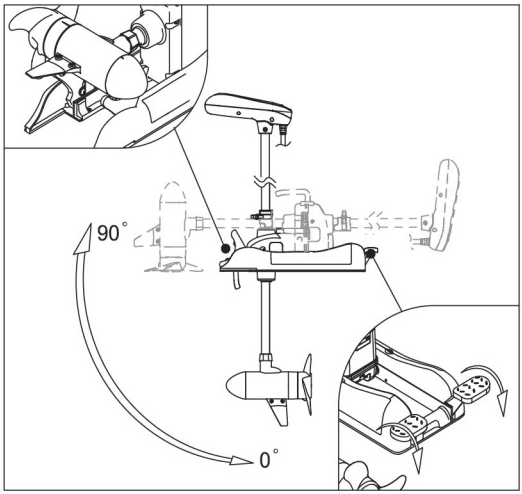


图. 6

## 2. 推进器的吃水深度

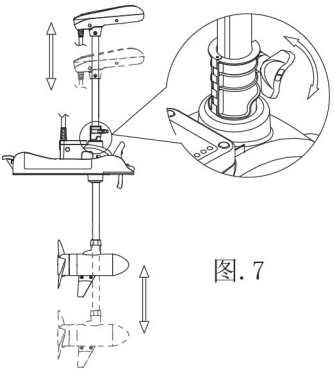

图. 7

警告 WARNING 在调节吃水深度前，请先握住电机支杆以免电机滑落。

松开深度定位套上的螺栓。然后慢慢往下放或上提将电机调节至合适的吃水深度再上紧螺栓固定。（如图. 7）

## 3. 遥控器面板介绍

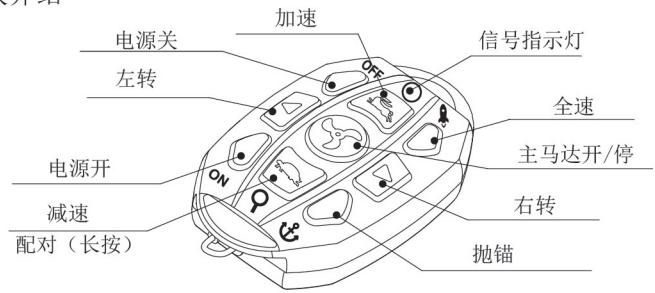


## 4. 遥控器与推进器的连接

长按推进器电源指示区下的 键（如图. 8）。
再长按遥控器上的 键，当听到“蜂鸣短响3声”，即说明遥控器对码储存成功，松开 键和 键后推进器可立即使用。

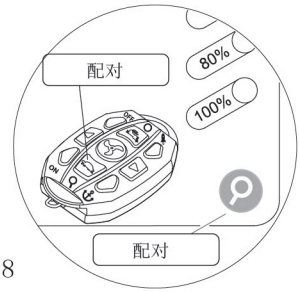


图. 8

## 5. 遥控器信号指示灯

1. 按电源键“ON”打开遥控器，遥控器蓝色指示灯保持常亮或闪烁。

2. 按下遥控器任意按键，遥控器红色指示灯闪烁，表示信号发送正常。

3. 按下 键，遥控器指示灯显示粉红色或紫色，此时推进器进入抛锚模式。

4. 按下电源键“OFF”关闭遥控器，指示灯灭。（如图. 9）

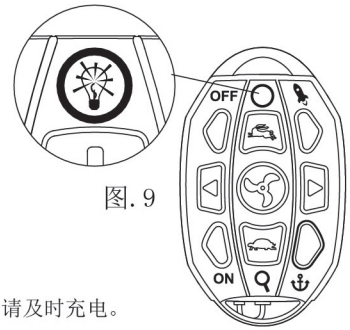


图. 9

注 NOTE 遥控器按电源键“ON”指示灯不亮或亮红色，表示电量过低，请及时充电。

## 6. 推进器速度控制

首先按一下 键激活推进器，按 或 键来调节推进器的航速。如要停止推进再按一下 键。（如图. 10）

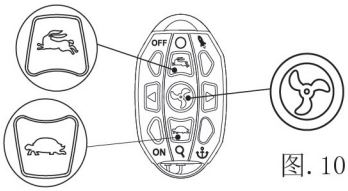

图. 10

## 7. 推进器方向控制

按一下 或 键时推进器会按照对应的命令转向。（如图. 11）

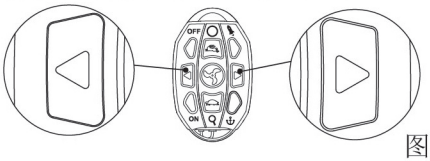

图. 11

## 8. 全速按键

按 使推进器全速运行，再按一次 推进器复回原速度。（如图. 12）

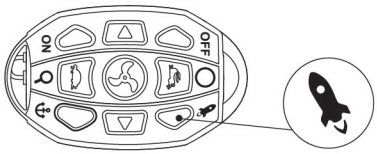

图. 12

## 9. 抛锚模式

按下 键使推进器进入抛锚状态；再次按下 键退出抛锚状态；按下 和 键调速继续航行。

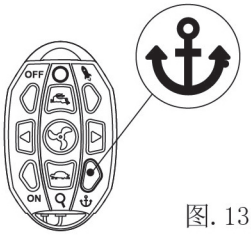

图. 13

## 10. 挂带的使用

为了方便操作，配备了多用途挂带，用户可自行选择使用。(图. 14)

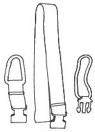
图. 14

## 11. 遥控器充电方法及注意事项

1. 拉开遥控器末端防水塞，插上USB充电线，充电线红灯亮表示充电中，绿灯亮表示充电完毕，如果灯不亮表示充电异常，可更换充电电源或者用移动电源充电。

为了使电池达到最佳的使用寿命，遥控器在长时间不使用时，建议给遥控器充满电，并每隔三个月补充一次。

2. 遥控器电量饱和时可以连续使用约48小时，建议外出游玩时携带移动电源（如图. 15a）或另行购买我们的产品#59915：直流电源适配器（如图. 15b），可以给遥控器和手机充电！（如图. 15c）

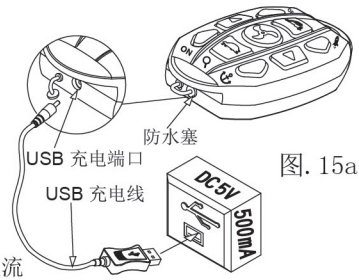

图. 15a

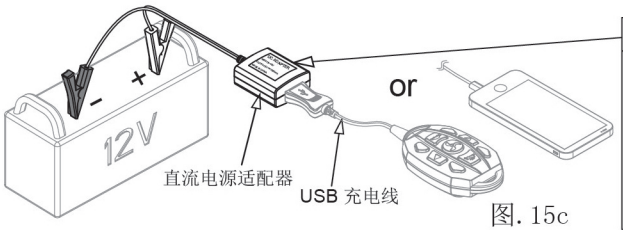

图. 15c

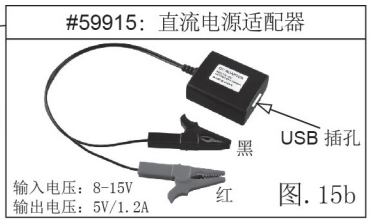

图. 15b

12. 电源指示区

推进器上设有一个检测电源的指示区。满电时所有电源指示灯亮着。当电量降低时，电源指示灯组的灯会从上往下灭。当电源指示灯剩下最后的一盏时（电量为20%），建议给予蓄电池充电。（如图. 16）

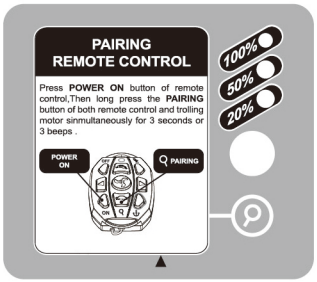


图. 16

## 蜂鸣模式

| 蜂鸣模式 | 蜂鸣响声说明 |
|---|---|
| 短响1声 | 操作命令接收成功 |
| 短响2声 | 停止操作命令或返回原设置 |
| 短响3声 | 遥控器与推进器连接成功 |
| 短响5声 | 推进器已开机 |
| 连续短响声 | 电池电量不足状态或缠水草 |
| 连续长响声 | 推进电机大电流保护 |

★ 如有其它问题，请与汉飞客服中心联系。

## 故障与修复

### 1. 电机运行艰难或停止运作

查看电源是否按正确方式牢固连接。

如发现蓄电池与主电源线的接触点附着异物或生锈，应当给予清洁。

查看蓄电池电量是否充足。如电量过低时请充电。

检查螺旋桨是否被线或水草缠绕。如有异物阻塞螺旋桨内部，请卸下螺旋桨进行清洗。（“警告”清洗螺旋桨时请先切断电源）

检查螺旋桨固定销是否损坏。

### 2. 推进器噪音或晃动大

检查螺旋桨是否安装牢固。

查看螺旋桨及其固定销是否弯曲变形，如损坏严重建议更换配件。

断开电源，用手转动螺旋桨，如受阻碍或卡住，表面电机内部可能受损。请停止使用并联系汉飞客服中心。

### 3. 操作故障指示

大电流保护——如连续“蜂鸣长响”推进器停止运作，表示螺旋桨受阻碍。请检查是否超载或被钓鱼线、水草缠绕。如有异物阻塞螺旋桨内部，请卸下螺旋桨进行清洗。

低电压保护——当电源电压不足时（指示灯区剩下20%的红灯）连续“蜂鸣短响”，这时需要更换电池。

## 维护与保养

1. 在推进器每次使用后应该按说明书要求冲洗保养，冲洗过后应保持整洁，因不当使用导致电机表面腐蚀或损坏属保修无效。（请参考P. 11）
2. 每次使用后，用水彻底冲洗，将附着螺旋桨的线、水草和阻塞于螺旋桨内部的杂物等清洁干净。（清洗部位请阅P. 11“冲洗干净”）
3. 用户应定期对各个活动关节部分给予润滑，使用专业工具（如：螺丝刀，扳手等）调紧松脱的部位。
4. 使用后应在电池与主电源线的连接处给予防锈处理。5. 请把推进器存放在干爽通风的环境下。
6. 请勿在环境复杂的水域里使用，以免损坏推进器。 7. 请勿使推进器受重压或撞击。
8. 本产品纯属户外娱乐设备。用户不得将其作为长时间长距离或超负荷营运使用。

# 装箱清单 Packing List

| 产品编号 Model | 50736 12V / 55lbs | 50737 24V / 80lbs | 50738 36V / 101lbs |
|---|---|---|---|
| 装箱内容 Contents | 2 | 2 | 2 |
| | 3 | 5 | 5 |
| | 1 | 4 | 6 |
| | | 1 | 1 |

**1** GPS导航手册 / GPS MANUAL




English version 1PCS




中文版 1PCS

**2**

| 推进器 Trolling Motors | 无线口袋遥控器 Wireless pocket remote | 挂带 Slings | USB充电线 USB Charging cable | PM4x14 螺丝 PM4x14 screws |
|---|---|---|---|---|
| 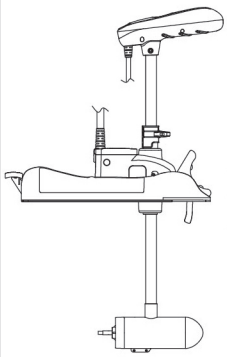 |  1PCS | 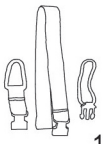 1PCS | 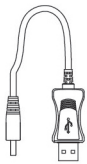 1PCS | 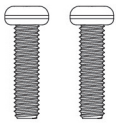 2PCS |
| 说明书 | 阳极片 | 插销 | M4 螺母 | |
| OWNER`S MANUAL | Sacrificial Anode | Drive pin | M4 nuts | |
| |  1PCS |  2PCS |  2PCS |  2PCS |
| 电机鳍 | M6 螺母 | TM6X60 螺丝 | Ø20XØ6.5X1垫片 | 电机防滑轮 |
| Motor fin | M6 nuts | TM6X60 screws | Ø20XØ6.5X1 Washer | Motor anti-pulley |
| 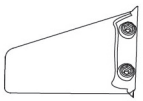 1PCS | 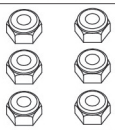 6PCS | 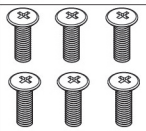 6PCS | 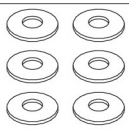 6PCS |  6PCS |

**3**

| 螺旋桨 Propeller | Ø18XØ8.2X1垫片 Ø18XØ8.2X1 Washer | M8 螺母 M8 nuts | 多用扳手 Propeller Wrench |
|---|---|---|---|
|  1PCS |  2PCS | 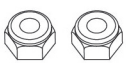 2PCS |  1PCS |

**4**

| 24V跳线 24V Jumper wire |
|---|
| 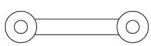 1PCS |

**5**

| 螺旋桨 Propeller | Ø18XØ10.2X1 垫片 Ø18XØ10.2X1 Washer | M10 螺母 M10 nuts | 多用扳手 Propeller Wrench |
|---|---|---|---|
|  1PCS |  2PCS |  2PCS |  1PCS |

**6**

| 36V跳线 36V Jumper wire |
|---|
| 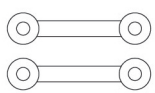 2PCS |

中 山 市 雅 太 电 器 有 限 公 司
**Yatai Electric Appliances Co.,Ltd.**
地址：中国广东省中山市三乡镇南龙工业区新龙街四号
Add:No.4 Xinlong St.Nanlong Industrial Park,
Sanxiang, zhongshan,guangdong Province,China.
邮编/Postcode:528463
电话/Tel:+86 760 86692666
传真/Fax:+86 760 86692996
**WWW.HASWING.COM**

版本号/Version：V01
Printed in China