SOLAR ELECTRIC

KOSTAL

PLENTICORE G3

Hybrid inverter



Operating manual

Legal notice

KOSTAL Solar Electric GmbH
Hanferstraße 6
79108 Freiburg i. Br.
Germany
Tel. +49 (0)761 477 44-100
Fax +49 (0)761 477 44-111

www.kostal-solar-electric.com

Exclusion of liability

All names, trademarks, product names and other designations used in this manual may be legally protected even if not indicated as such (e.g. as a trademark). KOSTAL Solar Electric GmbH assumes no liability for their free usage. The illustrations and texts have been compiled with great care. However, the possibility of errors cannot be ruled out. The compilation is made without any guarantee.

General note on gender equality

KOSTAL Solar Electric GmbH is aware of how language impacts on gender equality and always makes an effort to reflect this in documentation. Nevertheless, for the sake of readability we are unable to use non-gender-specific terms throughout and use the masculine form instead.

© 2024 KOSTAL Solar Electric GmbH

All rights reserved by KOSTAL Solar Electric GmbH, including those of reproduction by photocopy andstorage in electronic media. Commercial use or distribution of the texts, models, diagrams and photographs appearing in this product is not permitted. This manual may not be reproduced, stored, transmitted or translated in any form or by means of any medium, in whole or in part, without prior written-permission.

Valid from version:

Software (SW): 3.03.10.14764

Contents

1. About this documentation 7
1.1 Validity of the documentation 8
1.2 Content, function and intended audience of the documentation 9
1.3 Applicable documents and further information 10
1.4 Notes in this manual 11

2. Safety 13
2.1 Proper use 14
2.2 Improper use 15
2.3 The operator's obligations 16
2.4 Qualification of the staff 17
2.5 Sources of danger 18
2.6 Safety devices 19
2.7 Personal protective equipment 20
2.8 Emergency procedure 21
2.9 Observed standards and guidelines 22

3. Device and system description 23
3.1 Type plate and labels on the device 24
3.2 System overview 26
3.3 The inverter 32
3.4 DC circuit switch on inverter 33
3.5 The connection area 34
3.6 The terminal compartment 35
3.7 Overview of Smart Communication Board 36
3.8 Functions 38

4. Transport and scope of delivery 56
4.1 Transport and storage 57
4.2 Scope of delivery 58

5. Installation 59
5.1 Selecting the installation site 60
5.2 Wifi installation site 62
5.3 Wall mounting 63

6. Electrical connection 64
6.1 Electrical connection 65
6.2 DC overvoltage protection (optional) 68

© 2024 KOSTAL Solar Electric GmbH

6.3 Energy meter connection ... 69
6.4 Ripple control receiver ... 72
6.5 External surge protection device (SPD) ... 76
6.6 Backup switch connection (optional) ... 79
6.7 Connection of switched outputs ... 83
6.8 Communication connection ... 90
6.9 Connecting battery ... 94
6.10 Closing the inverter ... 98
6.11 Connecting battery's DC cables ... 99
6.12 Solar module connection ... 101

7. Initial commissioning ... 105
7.1 Initial commissioning ... 106
7.2 Configuring settings in the Webserver ... 119
7.3 Handover to the operator ... 120

8. Inverter operation ... 121
8.1 Control panel ... 122
8.2 Operational status (display) ... 125
8.3 Operational status (LEDs) ... 128

9. User interface and menus ... 129
9.1 Inverter menu structure ... 130
9.2 Inverter menus ... 134
9.3 The inverter Webserver ... 146

10. KOSTAL Solar App/Tools ... 190
10.1 KOSTAL Solar App ... 191
10.2 KOSTAL Solar Portal ... 192

11. Connection types ... 194
11.1 Connecting methods between inverter/computer ... 195
11.2 Use inverter as WLAN bridge for other devices ... 196
11.3 Settings on the computer ... 198
11.4 Create LAN direct connection between inverter/computer ... 199
11.5 Remove LAN direct connection between inverter/computer ... 201

12. Switched outputs ... 202
12.1 Switched outputs at a glance ... 203
12.2 Set up self-consumption control for load control ... 205
12.3 Set up self-consumption control for heat pumps (SG Ready) ... 208
12.4 Set up self-consumption control for wallbox ... 210
12.5 Set up switched output for reporting events ... 212

© 2024 KOSTAL Solar Electric GmbH

12.6 Switched output via external control ... 214

13. Active power control ... 215
13.1 Why active power control? ... 216
13.2 Limitation of the PV feed-in capacity ... 217
13.3 Active power control with a ripple control receiver ... 218
13.4 Active power control using smart measuring systems ... 221
13.5 Active power control via EEBus ... 223

14. External battery control ... 225
14.1 External battery control ... 226
14.2 External battery control via Modbus (TCP) ... 227
14.3 External battery control via digital inputs ... 229

15. Backup mode ... 231
15.1 Backup mode with the KOSTAL BackUp Switch ... 232
15.2 Backup mode with an automatic backup box ... 234
15.3 Limitations in backup mode ... 236

16. System monitoring ... 238
16.1 The log data ... 239
16.2 Retrieving, storing and graphically depicting log data ... 240
16.3 The KOSTAL Solar Portal ... 242

17. Switching the inverter on and off ... 243
17.1 Switching on the inverter ... 244
17.2 Switching off the inverter ... 245
17.3 De-energising the inverter ... 246
17.4 When working on the DC feed cables ... 247

18. Maintenance ... 249
18.1 Maintenance and cleaning ... 250
18.2 Housing cleaning ... 251
18.3 Cleaning the fans ... 252
18.4 Updating software ... 254
18.5 Event codes ... 257

19. Technical information ... 258
19.1 Technical data ... 259
19.2 Block diagram ... 263

20. Accessories ... 264
20.1 Activating battery connection ... 265

© 2024 KOSTAL Solar Electric GmbH

20.2 DC overvoltage protection 266
20.3 KOSTAL BackUp Switch – manual switch 267

21. Warranty and service 269

22. Appendix 270
22.1 EU Declaration of Conformity 271
22.2 Open Source licence 272
22.3 Decommissioning and disposal 273

© 2024 KOSTAL Solar Electric GmbH

1. About this documentation

This documentation contains important information on the functional principles of your product as well as its safety and usage.

Read this documentation carefully and in full before you work with the product. Follow the instructions and safety specifications in this documentation during all activities.

Contents

1.1 Validity of the documentation 8
1.2 Content, function and intended audience of the documentation 9
1.3 Applicable documents and further information 10
1.4 Notes in this manual 11
1.4.1 Warnings 12
1.4.2 Meaning of symbols in information notes 12

© 2024 KOSTAL Solar Electric GmbH

1.1 Validity of the documentation

This documentation applies to the hybrid inverter of the PLENTICORE G3 series.

© 2024 KOSTAL Solar Electric GmbH

1.2 Content, function and intended audience of the documentation

Content and function of the document

This documentation is an operating manual and is part of the product it describes.

This documentation provides you with important information on the following topics:

- Structure and function of the product
- Handling the product safely
- Explanations, specifications and instructions for handling the product, from transportation to disposal
- Technical data

Target groups

This documentation is aimed at the following categories of people:

- System planners
- Plant owners
- Qualified staff in transport, storage, mounting, installation, operation, maintenance and disposal

© 2024 KOSTAL Solar Electric GmbH

1.3 Applicable documents and further information

To fully understand the content of this documentation and to perform the described work steps safely and in full, you require the following additional documents and information sources.

You can find all of the information about the product on our website in the ***Download*** area: **www.kostal-solar-electric.com/download/**

Applicable documentation

- Documentation for other components in the system
- The Quick Start Guide provided as part of the product's scope of delivery
- List of countries whose specifications the product meets
- Certificates and manufacturer declarations to forward to the energy supplier
- List of energy meters that are approved for use with the product
- List of batteries that are approved for use with the product
- List of inverter parameter values specific to each country

Further information

- List of compatible partners: An overview of products from external partners that can be combined with products from KOSTAL Solar Electric GmbH to create optional upgrades.

Regulations

- Plant owner's operating regulations at the place of use
- Accident prevention regulations
- Regulations on work equipment safety
- Regulations on disposal and environmental protection
- Other applicable regulations at the place of use

© 2024 KOSTAL Solar Electric GmbH

1.4 Notes in this manual

A distinction is made in this manual between warnings and information notes. All notes are identified in the text line with an icon.

© 2024 KOSTAL Solar Electric GmbH

1.4.1 Warnings

DANGER

Indicates a direct hazard with a high level of risk, which, if not avoided, will result in death or serious injury.

WARNING

Indicates a hazard with a moderate level of risk, which, if not avoided, will result in death or serious injury.

CAUTION

Indicates a hazard with a low level of risk, which, if not avoided, will result in minor or slight injury or property damage.

INFO

Contains important instructions for installation and for trouble-free device operation in order to avoid damage to property and financial damages.

1.4.2 Meaning of symbols in information notes



The symbol indicates activities that may only be carried out by an electrician.



Information

© 2024 KOSTAL Solar Electric GmbH

2. Safety

This chapter provides you with important information on handling your product safely.

Contents

2.1 Proper use 14
2.2 Improper use 15
2.3 The operator's obligations 16
2.4 Qualification of the staff 17
2.5 Sources of danger 18
2.5.1 Danger of injury 18
2.5.2 Material damage 18
2.6 Safety devices 19
2.7 Personal protective equipment 20
2.8 Emergency procedure 21
2.8.1 Fire procedure 21
2.9 Observed standards and guidelines 22

© 2024 KOSTAL Solar Electric GmbH

2.1 Proper use

Intended purpose

- This product is an inverter and is used to convert direct current from photovoltaic systems into alternating current.
- The alternating current generated may be used as follows:
  - Self-consumption
  - Feed-in to the public grid
  - Temporary storage in a battery storage unit, if available

Field of use

- The product is intended for professional and private use.
- The product is only intended for installation in a grid-connected photovoltaic system.

Place of use

- The product is not intended for use in explosive or aggressive environmental conditions. Observe the specifications for the installation location.
- The product is intended for use indoors and outdoors.
- The product is only intended for stationary use.

Specifications for additional components, replacement parts and accessories

Additional components, replacement parts and accessories may only be used if they have been approved by KOSTAL Solar Electric GmbH for this product type.

You can find all of the information about the product on our website in the ***Download*** area:
www.kostal-solar-electric.com/download/

© 2024 KOSTAL Solar Electric GmbH

2.2 Improper use

Any use of the product other than the use described in this documentation and in the applicable documentation is improper and is therefore not permitted.

Making any changes to the product that are not described in this documentation is not permitted. Prohibited changes to the product will result in loss of warranty.

© 2024 KOSTAL Solar Electric GmbH

2.3 The operator's obligations

When using the product, the following obligations must be met:

Instruction

- Providing this documentation:
  - The operator must ensure that staff who carry out activities on and with the product have understood the content of the documentation for this product.
  - The operator must ensure that the documentation for this product is accessible to all users.
- Readability of the warning signs and labels on the product:
  - Warning signs and labels on the product must always remain legible after the product is installed.
  - The operator must replace any warning signs and labels that are no longer legible because they are old or damaged.

Occupational safety

- The operator must ensure that staff performing activities on and with the product are qualified to do so.
- The operator must ensure that the system is immediately shut down if there are discernible defects and must ensure that the defects are remedied.
- The operator must ensure that the product is only operated with the specified safety devices.

© 2024 KOSTAL Solar Electric GmbH

2.4 Qualification of the staff

The activities described in this documentation must only be performed by people who are qualified for the task. Depending on the activity, they require specific specialist knowledge in the following areas and knowledge of the relevant specialist terms:

- Electrics

The following additional, specific qualifications are required:

- Knowledge of all safety requirements for handling inverters
- Knowledge of the applicable regulations for handling the product. See **Applicable documents and further information, Page 10**.

© 2024 KOSTAL Solar Electric GmbH

2.5 Sources of danger

The product has been developed and tested in accordance with international safety requirements. Despite this, residual risks still exist and could cause personal injury and damage to property.

2.5.1 Danger of injury

Serious danger of injury or death from electric shock

When exposed to light, the PV modules generate a high DC voltage that is applied to the DC cables. Touching damaged live DC cables leads to life-threatening injuries or even death.

- Do not touch exposed live parts or cables.
- Before working on the product: De-energise product and secure it against being switched back on.
- For all work on the product: Wear suitable protective equipment and use suitable tools.

Danger of burns from hot housing parts

Housing parts can reach temperatures of over 60 °C during operation. Touching hot housing parts can cause burns.

- After commissioning, the only places that may be touched are the handles, control elements and the DC switch of the inverter.
- Switch off the product and allow it to cool.

2.5.2 Material damage

Risk of fire due to damaged supply cables

When exposed to light, the PV modules generate a high DC voltage that is applied to the inverter's supply cables. Damaged inverter supply cables or damaged plugs can cause a fire.

- Carry out regular visual checks on the supply cables and plugs.
- If you detect defects: Notify qualified staff and have the parts replaced.

© 2024 KOSTAL Solar Electric GmbH

2.6 Safety devices

Safety devices required during installation

The following safety devices must be installed:

- Line circuit breaker
- Residual current device

© 2024 KOSTAL Solar Electric GmbH

2.7 Personal protective equipment

For certain activities, staff are obligated to wear protective equipment. The required protective equipment is specified in the relevant chapters.

An overview of the required protective equipment

- Rubber gloves
- Protective glasses

© 2024 KOSTAL Solar Electric GmbH

2.8 Emergency procedure

2.8.1 Fire procedure

1. Leave the danger zone immediately.
2. Notify the fire service.
3. Tell the emergency services that a PV system is in operation and state the location of modules, inverters and separators.
4. Have any other measures carried out by qualified staff only.

© 2024 KOSTAL Solar Electric GmbH

2.9 Observed standards and guidelines

The EU Declaration of Conformity lists standards and guidelines, the requirements of which are met by the product.

You can find all of the information about the product on our website in the ***Download*** area:
www.kostal-solar-electric.com/download/

© 2024 KOSTAL Solar Electric GmbH

3. Device and system description

3.1 Type plate and labels on the device 24
3.2 System overview 26
3.3 The inverter 32
3.4 DC circuit switch on inverter 33
3.5 The connection area 34
3.6 The terminal compartment 35
3.7 Overview of Smart Communication Board 36
3.8 Functions 38
3.8.1 Product upgrades 38
3.8.2 Energy management 39
3.8.3 Recording home consumption 41
3.8.4 Storing energy 42
3.8.5 Shadow management 43
3.8.6 Communication 44
3.8.7 Ripple control receiver/smart meter 45
3.8.8 Self-consumption control 45
3.8.9 External battery control 46
3.8.10 DC overvoltage protection 47
3.8.11 Backup function 48
3.8.12 The Webserver 49
3.8.13 The data logger 50
3.8.14 Event codes 50
3.8.15 Service concept 50
3.8.16 KOSTAL Solar Terminal 51
3.8.17 KOSTAL Solar Portal 52
3.8.18 The KOSTAL Solar Plan layout software 54
3.8.19 KOSTAL Solar App 55

© 2024 KOSTAL Solar Electric GmbH

3.1 Type plate and labels on the device

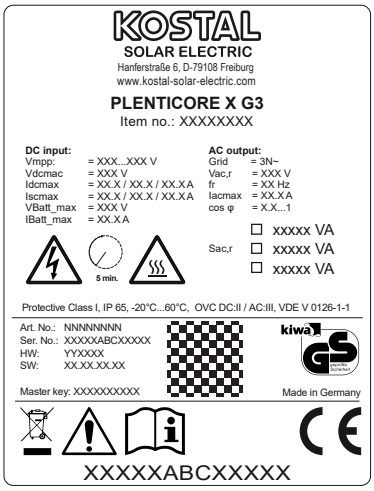

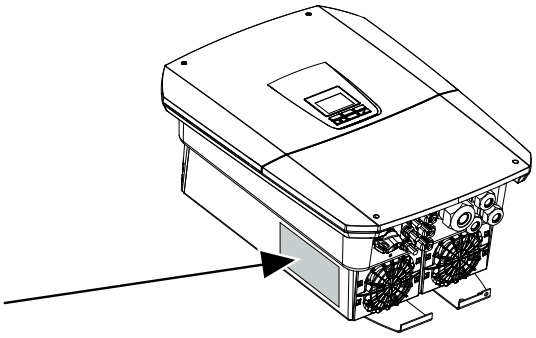

The type plate and other labels are attached to the device housing. These signs and labels must not be altered or removed.

The type plate gives you a quick overview of the most important data about the inverter. You will also require this information if you contact our service team.

You will find the following information on the type plate:

- Manufacturer
- Model
- Serial number and article number
- The ***master key*** for logging in as an installer
- Characteristics specific to the device
- QR code with the following information:
  Serial number, article number, hardware/software status, master key The QR code can be used to perform initial commissioning of the inverter via the KOSTAL Solar App.
- Details of the activated power in the inverter.

Symbol	Explanation
	Danger notice
	Danger due to electrical shock and discharge

© 2024 KOSTAL Solar Electric GmbH

Symbol	Explanation
	Danger due to burns
	Observe and read operating manual
	Danger due to electrical shock and discharge. Wait five minutes (discharge time of the capacitors) after shutdown
	Device must not be disposed of with household waste. Observe the local application of disposal requirements.
	CE marking The product satisfies the applicable EU requirements.
	Additional earth connection

© 2024 KOSTAL Solar Electric GmbH

3.2 System overview

The G3 PLENTICORE is a hybrid inverter that can be used as follows.

As a PV inverter

If the inverter is used as a pure PV inverter, only PV generators are connected to the DC inputs. There must be at least one PV generator connected to the inverter.

The energy generated can be used for self-consumption in the house grid or is fed into the public grid.

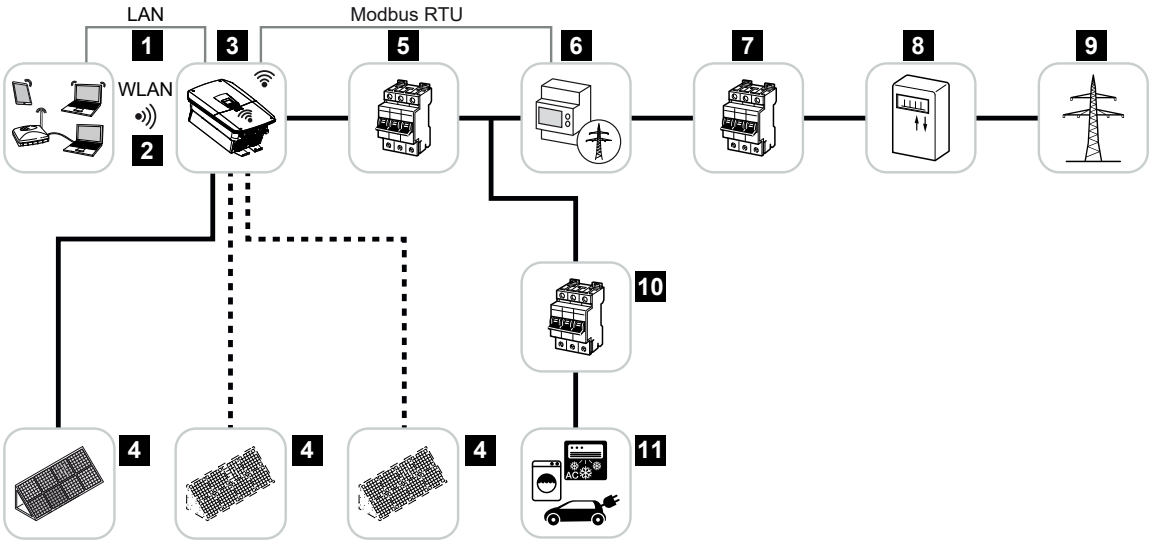

1 Communication link for inverter via LAN
2 Communication link for inverter via WLAN/WiFi
3 Inverter
4 PV generators
5 Line circuit breaker for inverter
6 Digital energy meter (Modbus RTU) at the grid connection point
7 Main fuse for building
8 Procurement and feed meter or smart meter (not in all countries)
9 Public grid
10 Line circuit breaker for energy consumers
11 Energy consumers

© 2024 KOSTAL Solar Electric GmbH

Hybrid inverter (product upgrade required)

If the inverter is being used as a hybrid inverter, PV generators and a battery are connected to the inverter.

For the battery to be detected at DC input 3, the ***battery function*** product upgrade must be activated in the inverter using an activation code.

The inverter is used to directly provide energy for self-consumption or to store surplus energy in the battery storage unit. The stored energy can be used for self-consumption in the house grid. Surplus energy that can no longer be stored is fed into the public grid.

In addition, energy from other AC energy suppliers (park controllers), e.g. PV systems, combined heat and power (CHP) units or small wind turbines, can be temporarily stored.

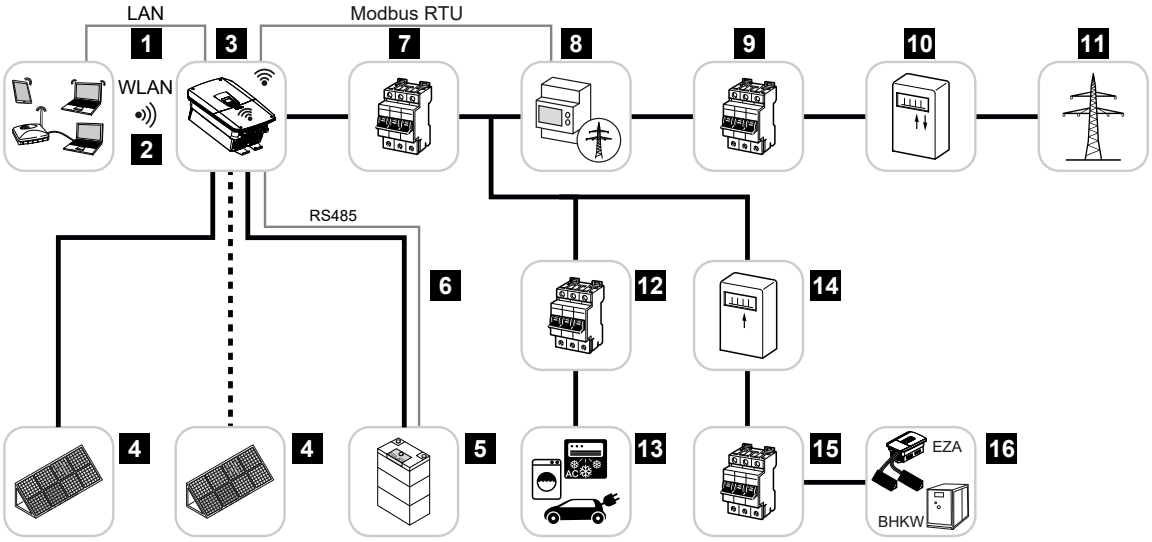

1 Communication link for inverter via LAN
2 Communication link for inverter via WiFi/WLAN
3 Inverter
4 PV generators
5 Connection for battery system (available as option after activation)
6 Communication link for battery management system
7 Line circuit breaker for inverter
8 Digital energy meter (Modbus RTU) at the grid connection point
9 Main fuse for building
10 Procurement and feed meter or smart meter (not in all countries)
11 Public grid
12 Line circuit breaker for energy consumers
13 Energy consumers
14 Feed meter for AC power source

© 2024 KOSTAL Solar Electric GmbH

15 Line circuit breaker for AC power source

16 AC power source, e.g. combined heat and power (CHP) unit, or other generation plants, such as PV inverter (the energy from the AC power source can be temporarily stored in the battery)

© 2024 KOSTAL Solar Electric GmbH

Battery inverter (product upgrade required)

If the inverter is being used as a pure battery inverter, there will be a battery connected to the DC 3 input only.

For the battery to be detected at DC input 3, the ***battery function*** product upgrade must be activated in the inverter using an activation code.

The inverter with connected battery storage is used to store energy from energy suppliers (park controllers) produced in the house grid, e.g., by other PV systems, combined heat and power (CHP) units or small wind turbines. The stored energy can then be used for self-consumption in the house grid.

There is the option to connect PV generators to the free DC inputs (hybrid inverter).

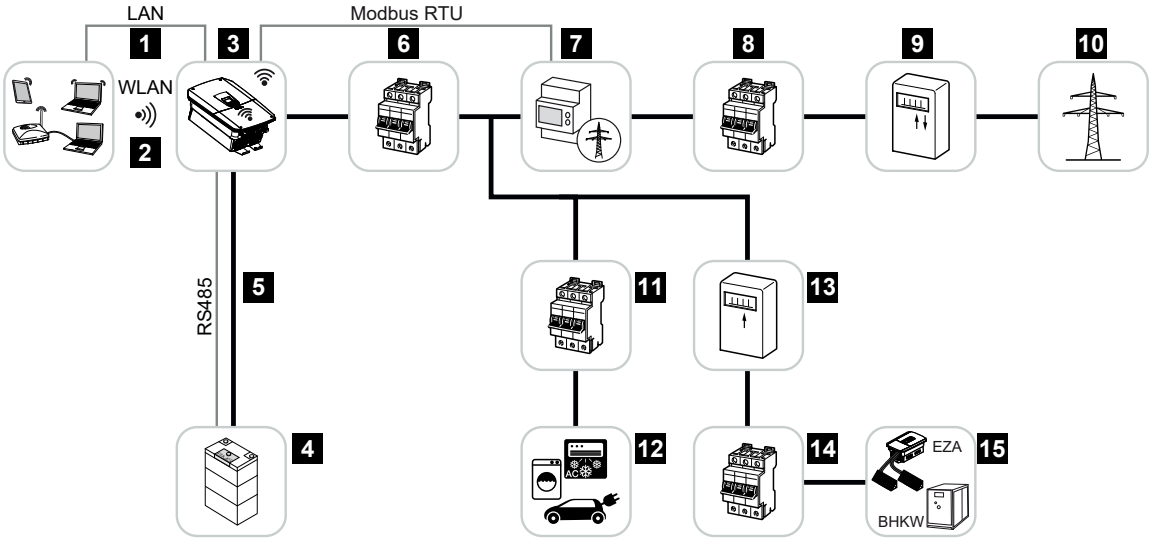

1 Communication link for inverter via LAN
2 Communication link for inverter via WiFi/WLAN
3 Inverter
4 Battery system connection
5 Communication link for Battery Management System (BMS) via RS485
6 Line circuit breaker for inverter
7 KOSTAL Smart Energy Meter (Modbus RTU)
8 Main fuse for building
9 Procurement and feed meter or smart meter (not in all countries)
10 Public grid
11 Line circuit breaker for power consumption
12 Power consumption
13 Feed meter for AC power source
14 Line circuit breaker for AC power source

© 2024 KOSTAL Solar Electric GmbH

15 AC power source, e.g. CHP unit, or other generation plants, such as PV inverter (the energy from the AC power source can be temporarily stored in the battery)

© 2024 KOSTAL Solar Electric GmbH

Product upgrades

Product upgrades can be activated using activation codes. This requires PLENTICOINs.

The PLENTICOIN is a single-purpose voucher for product upgrades. The PLENTICOIN can be redeemed in the KOSTAL Solar online shop against the required activation code (e.g. battery upgrade). The PLENTICOIN is purchased through specialist wholesalers.

The following product upgrades are available and can be obtained in the KOSTAL Solar Webshop using PLENTICOIN:

- **Battery upgrade**
  Enables a battery to be connected to DC input 3.
- **Cable upgrade**
  Increases the basic power level of the inverter by up to two levels, e.g. 15 kW > 17.5 kW > 20 kW.

Power classes

The inverter is available in three sizes, S, M and L, with a basic power level of 4.0 to 20 kW.

The basic power level can be increased by two levels using an optional product upgrade (power upgrade) to make system planning as flexible as possible.

The power upgrade can also be done later, without having to replace the inverter.

The power activated in the inverter can be marked on the type plate. The activated power is also shown in the inverter's parameter report, available from the Webserver, and on the inverter's display.

Size	Basic power	Level 1	Level 2
PLENTICORE S G3	4.0	5.5	7.0
PLENTICORE M G3	8.5	10	12.5
PLENTICORE L G3	15	17.5	20

You can find more information in the technical data.

Technical data, Page 259

© 2024 KOSTAL Solar Electric GmbH

3.3 The inverter

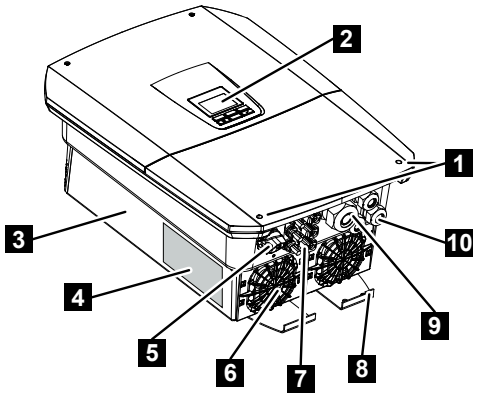

1 Cover screws
2 Display
3 Housing
4 Type plate
5 DC switch
6 Fan
7 Plug connector for connecting the PV generators and a battery system (battery connection optional)
8 Additional PE connection, outside
9 Cable opening for AC mains cable
10 Cable openings for communication

© 2024 KOSTAL Solar Electric GmbH

3.4 DC circuit switch on inverter

The inverter can be switched on and off via the DC circuit switch. The circuit switch can also be locked.

Switch on the inverter

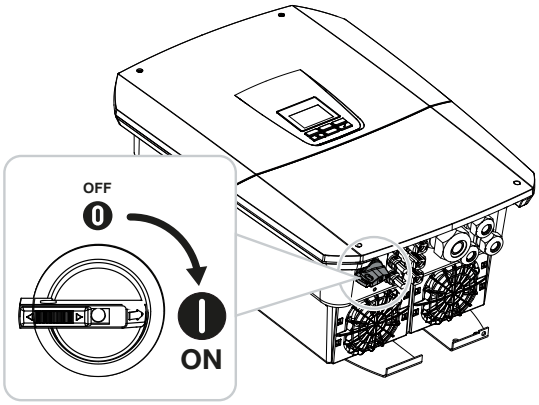

Switch off the inverter

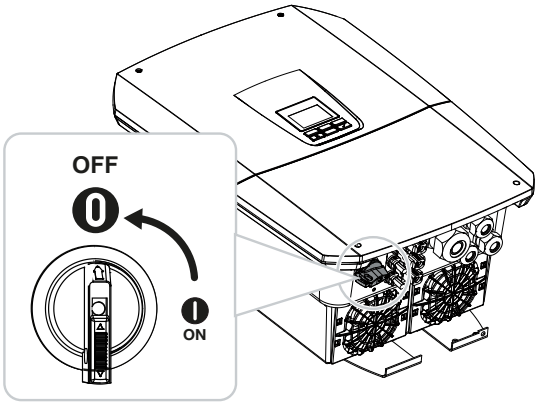

© 2024 KOSTAL Solar Electric GmbH

3.5 The connection area

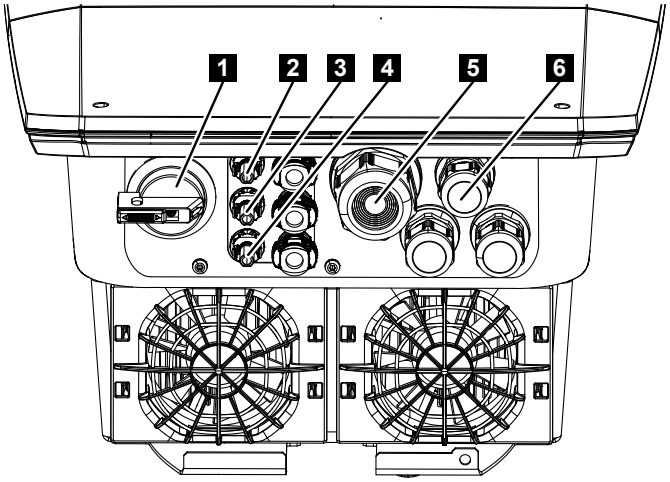

1 DC circuit switch
2 DC connection 1 for PV generators
3 DC connection 2 for PV generators
4 DC connection 3 for PV generators or a battery storage unit (optional)
5 Cable inlet for AC cable
6 Cable inlet for communication cables

DC inputs

PV generators or one battery storage unit can be connected to the DC inputs.

- DC1 input: For PV generators
- DC2 input: For PV generators
- DC3 input: For PV generators or an (optional) battery storage unit with an activation code (product upgrade)

© 2024 KOSTAL Solar Electric GmbH

3.6 The terminal compartment

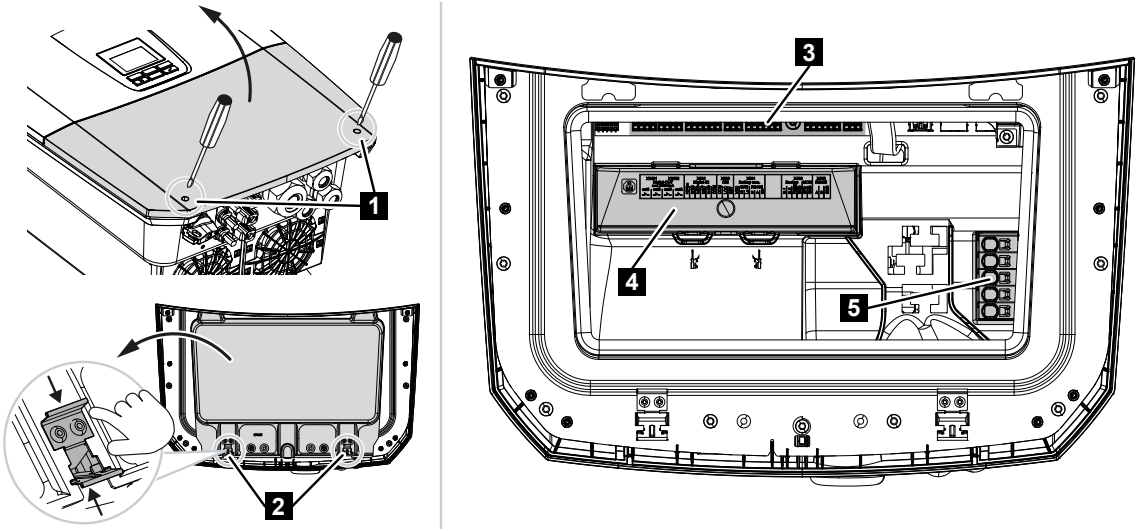

1 Cover screws
2 Terminal compartment clamps
3 Interface card (SCB)
4 Optional DC overvoltage protection
5 AC terminal

The terminal compartment can be opened by pushing the holding clamps together. The terminal compartment contains:

- the AC terminal,
- the interface card (Smart Communication Board (SCB))
- the installation position for the optional DC overvoltage protection module.

© 2024 KOSTAL Solar Electric GmbH

3.7 Overview of Smart Communication Board

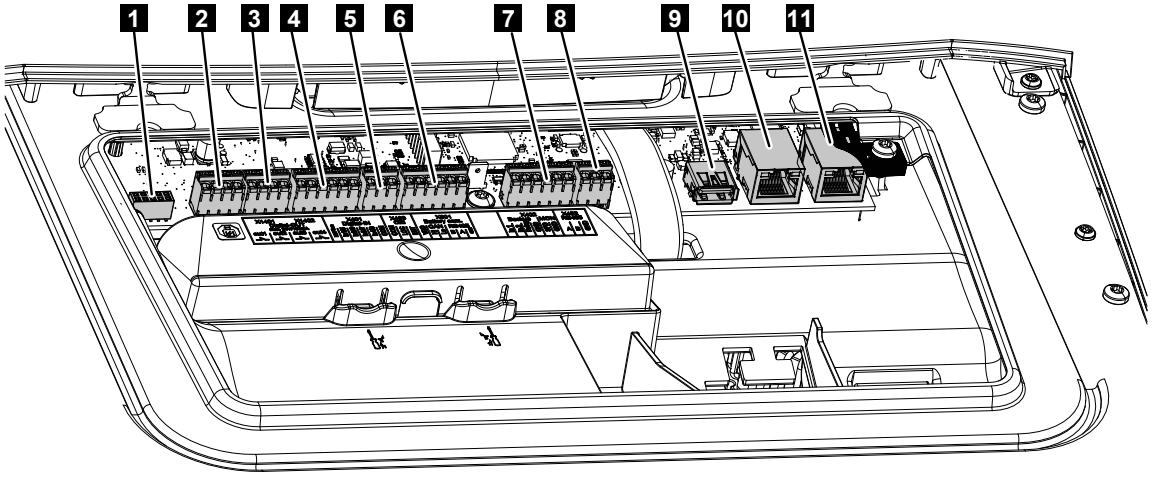

The Smart Communication Board (SCB) is the communication and interface centre. All the connections for communicating with other components can be found on the SCB.

Item	Designation	Terminal	Pin	Explanation
1	Not used	X603		-
2	Digital switched outputs	X1401	1–2	Potential-free switched outputs OUT 1 (NO or NC contact)
			3–4	Potential-free switched outputs OUT 2 (NO or NC contact)
3	Digital switched outputs	X1402	5–6	Potential-free switched outputs OUT 3 (NO or NC contact)
			7–8	Potential-free switched outputs OUT 4 (NO or NC contact)
4	Digital interface terminal for ripple control receiver/external battery control	X401	1	REF (+12 to 14 V supply voltage)
			2	Input 1
			3	Input 2
			4	Input 3
			5	Input 4
			6	COM (0 V ground)
5	Terminal for ripple control receiver CEI for Italy	X403	1	***common ref*** connection
			2	***commando locale*** connection
			3	***signale esterno*** connection
6	Battery communication terminal	X601	1	VDD (+12 to 14 V supply voltage)
			2	CANopen High interface (data +)

© 2024 KOSTAL Solar Electric GmbH

Item	Designation	Terminal	Pin	Explanation
			3	CANopen Low interface (data -)
			4	RS485 interface B
			5	RS485 interface A
			6	GND (0 V ground)
7	Connection PIN 1-4 Backup switch monitor input and PIN 5-6 SPD monitor input (evaluation of external overvoltage protection)	X402	1	IN1 monitor input for backup switch
			2	IN2 monitor input for backup switch
			3	Relay monitor input for backup switch
			4	GND (0 V ground)
			5	PLC monitor
			6	GND (0 V ground)
8	Terminal for energy meter (Modbus RTU)	X452	1	Interface A RS485/Modbus RTU
			2	Interface B RS485/Modbus RTU
			3	GND
9	USB 2.0 interface	X171	1	USB 2.0 max. 500 mA (for service purposes)
10	Ethernet connection (RJ45)	X207	1	RJ45 max. 100 Mbit (LAN connection for connection to a router or other devices, e.g. inverter, KSEM)
11		X206	1	

© 2024 KOSTAL Solar Electric GmbH

3.8 Functions

3.8.1 Product upgrades

Product upgrades can be activated using activation codes. This requires PLENTICOINs.

The PLENTICOIN is a single-purpose voucher for product upgrades. The PLENTICOIN can be redeemed in the KOSTAL Solar online shop against the required activation code (e.g. battery upgrade). The PLENTICOIN is purchased through specialist wholesalers.

The following product upgrades are available and can be obtained in the KOSTAL Solar Webshop using PLENTICOIN:

- **Battery upgrade**
  Enables a battery to be connected to DC input 3.
- **Cable upgrade**
  Increases the basic power level of the inverter by up to two levels, e.g. 15 kW > 17.5 kW > 20 kW.

© 2024 KOSTAL Solar Electric GmbH

3.8.2 Energy management

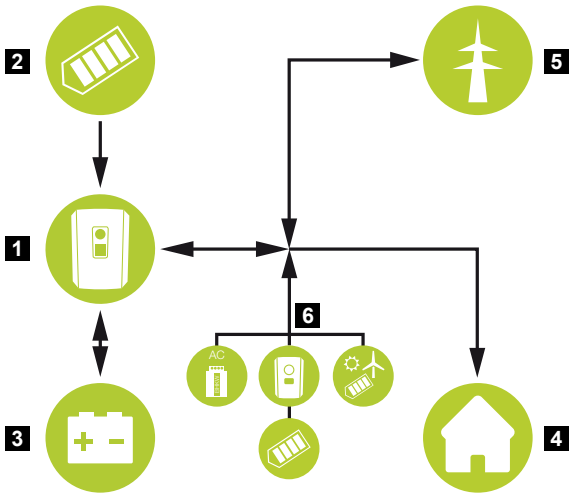

1 Inverter
2 PV generators
3 Battery
4 Consumers in the house grid
5 Public grid
6 Additional energy sources

The energy management system controls the distribution of energy between the DC side (PV generator) and the AC side (house grid and public grid). For this purpose, the energy management system checks for consumption in the local house grid. The logic of the energy management system then calculates and controls the optimal usage of PV energy. The generated PV energy is used for self-consumption as a priority. The remaining generated PV energy is fed into the public grid and remunerated.

The energy from PV generators is used for the following:

- Local consumers
- Charging the battery
- Feeding surplus energy into the public grid

Energy from a connected battery is used for the following:

- Local consumers
- Feeding into the public grid (only possible using external battery control system/battery manager)

Energy from the public grid is used for the following:

- Local consumers
- Charging the battery, e.g. to protect the battery in the winter or via the external battery control system/battery manager.

© 2024 KOSTAL Solar Electric GmbH

Energy from additional AC power sources is used for the following:

- Local consumers
- Charging the battery
- Feeding surplus energy into the public grid

INFO

AC power sources can be, for example, KOSTAL inverters, other inverters, combined heat and power (CHP) units, small wind turbines or other energy sources in the house grid.

To store this energy in a connected battery, the ***Storage of surplus AC energy from local generation*** function must be activated in the Webserver in ***Service menu > Battery settings***.

© 2024 KOSTAL Solar Electric GmbH

3.8.3 Recording home consumption

INFO

In order for the home consumption to be displayed, a compatible energy meter must be installed in the house network.

Connecting up an external energy meter (via Modbus RTU) enables the inverter to monitor and optimally control the flow of energy in the home for 24 hours.

- Using energy meter (Modbus RTU) to record house consumption
- 24-hour measurement
- Various types of energy meter can be used

INFO

You will find a list of **approved energy meters** and their purpose in the download area for the product on our website at **https://www.kostal-solar-electric.com**.

© 2024 KOSTAL Solar Electric GmbH

3.8.4 Storing energy

If external battery storage is connected to DC input 3 on the inverter (can be released using the battery activation code), the PV energy generated can be stored and accessed later on for self-consumption.

- The connection and battery use at the DC input 3 on the inverter must be released beforehand in the inverter. To do this, the battery activation code can be purchased from the KOSTAL Solar online shop.
- You will find a list of approved KOSTAL Solar Electric battery storage systems on our website in the download area for the product.
- By using the smart generation and consumption forecast, usage of the generated energy is optimised beyond simply storing power, while fulfilling all power limitations stipulated by law.

© 2024 KOSTAL Solar Electric GmbH

3.8.5 Shadow management

If a connected PV string is exposed to partial shading, for example from other parts of the building, trees or energy cables, the entire PV string will no longer achieve its optimal power. The affected PV modules behave like a bottleneck and thereby prevent the string in question from operating at a higher output.

The intelligent shadow management integrated in the inverter now adapts the MPP tracker of the selected string so that the PV string can always deliver optimum performance in spite of partial shading.

Shadow management can be activated per string via the Webserver by going to ***Service menu > Generator settings***.

© 2024 KOSTAL Solar Electric GmbH

3.8.6 Communication

The inverter provides various interfaces for communication purposes. These establish a connection to other inverters, sensors, energy meters, batteries or a link to the Internet.

- **LAN**
  LAN connects the inverter to the local home network, through which it can then access the Internet and solar portal. In addition, there is a second LAN interface on the inverter's communication board to which another device (e.g. inverter) can be connected.
- **Wifi**
  Via Wifi, the inverter can be connected to a Wifi router located in the local home network, giving it access to the Internet and the solar portal.
- **Wifi access point**
  The inverter offers a Wifi access point for initial commissioning. This can then be used to connect to a smartphone or PC and carry out the initial commissioning via the web-based installation wizard.
- **WLAN bridge**
  If there are several KOSTAL inverters in a system, the inverter can be used as a WLAN bridge to the WLAN router. Other inverters, energy meters or battery storage units can be connected via LAN cable to the inverter serving as a WLAN bridge to establish a connection to the local home network and beyond.
- **RS485/Modbus (RTU)**
  Energy meters are connected to the Modbus interface and record the flow of energy within the house.

Secure communication

As with all devices that are connected to the Internet, all data transferred externally by the inverter is only transferred in encrypted form.

- **Security concept**:
  Encrypted transfer of data to the solar portal
- Data encryption in line with AES and SSL standards

© 2024 KOSTAL Solar Electric GmbH

3.8.7 Ripple control receiver/smart meter

Once the system reaches a certain size, which may vary from one country to the next, the use of a ripple control receiver is mandatory. In some instances, the energy provider also requires a smart meter to be installed.

Contact your energy provider for more information.

If a smart meter gateway is fitted in your house installation, the inverter can be connected to the smart meter gateway using a control box. The control box is connected to the inverter like a ripple control receiver.

For more information, see **Active power control, Page 215**

3.8.8 Self-consumption control

To make the best possible use of the PV energy generated, self-consumption should be prioritised. To do this, the inverter allows consumers to be connected to it via an external relay. The consumers can then be switched on when there is sufficient PV power and thereby access the PV energy generated at that point in time.

For more information, see **Switched outputs, Page 202**.

© 2024 KOSTAL Solar Electric GmbH

3.8.9 External battery control

The inverter has a charge/discharge management system that can be configured via the Webserver in ***Service menu > Battery settings***. Among other things, the ***external battery control system*** can be activated here, which then implements the specifications of your energy supplier or other service provider, for example.

Using external battery management, the external supplier has access to the inverter's charge/discharge management. The supplier can control this so that the battery energy can be used for home consumption, for example, or is fed into the public grid to use it for grid stability (load peaks in the grid (peak shaving)) or to perform grid services (primary control power).

INFO

The system installer is responsible for the correct selection and installation of the meter structure in the house grid. The specifications of the energy supplier must be observed in this case.

The system owner is responsible for correctly using and selecting internal or external charge/discharge management.

© 2024 KOSTAL Solar Electric GmbH

3.8.10 DC overvoltage protection

An optional type 2 DC overvoltage protection module can be used in the inverter. The overvoltage protection module protects the inverter on the DC side. The overvoltage protection module can be obtained from wholesalers or your installer.

Features:

- DC overvoltage protection module SPD DC type 2 (Surge Protective Device), tested according to IEC 61643-31
- Optional retrofittable plug-in module
- Overvoltage protection module simply plugged into the inverter (plug and play)
- Module automatically activated in the inverter (the module is displayed in the Webserver)
- Failure detection is automatically activated and the failure message is forwarded to the KOSTAL Solar Portal.
- Simple and easy to replace if it fails

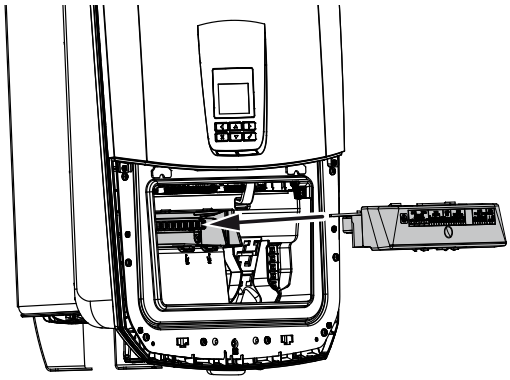

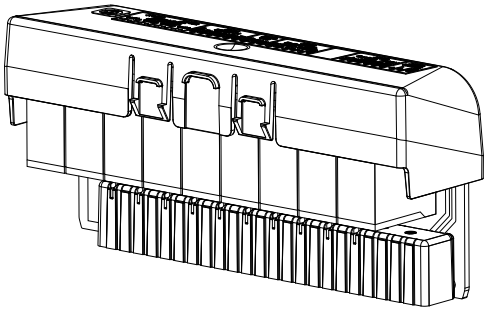

You will find a list of approved KOSTAL Solar Electric **accessories** on our website in the download area for the product.

© 2024 KOSTAL Solar Electric GmbH

3.8.11 Backup function

If a battery is connected to the inverter, the inverter offers the option of continuing to supply the house grid with energy using the PV and battery should the mains supply fail.

For this purpose, a manual or automatic backup box must be installed in the house grid at the grid connection point.

KOSTAL offers the **KOSTAL BackUp Switch** as a manual variant, which disconnects the public grid from the house grid in backup mode.

Automatic backup boxes are offered as accessories by other suppliers.

You will find a list of approved KOSTAL Solar Electric **accessories** on our website in the download area for the product.

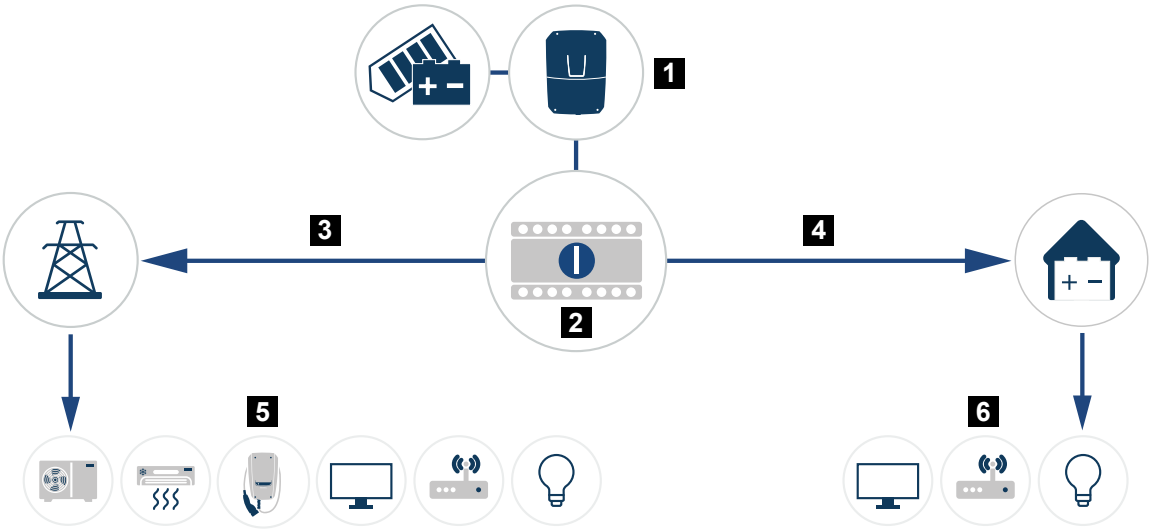

1 PLENTICORE G3
2 KOSTAL BackUp Switch (manual switch)
3 Mains operation
4 Backup mode
5 Consumers in grid mode
6 Consumers in backup mode

© 2024 KOSTAL Solar Electric GmbH

3.8.12 The Webserver

The Webserver is the graphic interface (displayed in the browser, e.g. Firefox, Microsoft Edge or Google Chrome) for querying and configuring the inverter.

The Webserver provides the following functions:

- Logging in to the device
- Querying the status
- Current power values for the PV generators
- Present consumption values
- Current values of grid connection (e.g. feed-in, consumption)
- Statistics
- Using the self-consumption terminal
- Displaying log data
- Displaying current version (e.g. software, firmware, hardware)
- Configuring the device
  (e.g. software update, enabling options, battery configuration, network settings, activating solar portal, implementing settings specified by the energy supplier, etc.)

© 2024 KOSTAL Solar Electric GmbH

3.8.13 The data logger

A data logger is integrated in the inverter. The data logger is a data storage system, which collects and stores the yield and performance data of the inverter and the storage system. Yield data is saved every 5 minutes.

INFO

Once the storage time has elapsed, the oldest data is always deleted.

For long-term backup, the data must be backed up with a PC or sent to a solar portal.

Saving interval	Storage time
5 minutes	Max. 365 days

For more information, see **System monitoring, Page 238**.

3.8.14 Event codes

There is no need to take action when an event occurs occasionally or only briefly and the device resumes operation afterwards. If an event persists or recurs frequently, the cause must be determined and rectified.

A list of the current event codes and measures can be found in the document **Ereignisliste/Event list**, which can be found in the **download area** for your product.

3.8.15 Service concept

The inverter includes smart monitoring. If an event occurs during operation, an event code is shown on the display and in the Webserver.

In a service scenario you, as the operator of the system, can read off the message and contact your installer or service partner.

© 2024 KOSTAL Solar Electric GmbH

3.8.16 KOSTAL Solar Terminal

The KOSTAL Solar Terminal is the central gateway for you as a user. You can find the KOSTAL Solar Terminal on our website or at this link:
https://terminal.kostal-solar-electric.com.

KOSTAL Solar Terminal

The KOSTAL Solar Terminal is a central hub for various applications. To use them, you have to register once. You will then be given a user account for all the applications offered in the KOSTAL Solar Terminal. You can find more information on our website **https://www.kostal-solar-electric.com**.

If you have already registered for the KOSTAL Solar Terminal, you can sign in using your user details.

You have the following applications available to you, depending on your user role:

- KOSTAL Solar Portal
- KOSTAL Solar online shop
- KOSTAL Solar Plan
- KOSTAL Solar Config – pre-configuration tool for system planners
- Smart Warranty activation
- Solar repower check

© 2024 KOSTAL Solar Electric GmbH

3.8.17 KOSTAL Solar Portal

The KOSTAL Solar Portal is a free online platform for monitoring the PV system.

The Solar Portal enables the operation of the inverter to be monitored via the Internet. For this purpose, the inverter sends the PV system's yield data and event messages to the solar portal via the Internet.

The information is then stored in the solar portal. You can view and call up this information via the Internet.

This means that the KOSTAL Solar Portal protects your investment in a PV system from yield losses, e.g. by actively warning you by e-mail when an event occurs.

Register for the KOSTAL Solar Portal free of charge using the KOSTAL Solar Terminal at **https://terminal.kostal-solar-electric.com**.



The Solar Portal has the following functions:

- Worldwide portal access via the Internet
- Graphic representation of the power and yield data
- Visualisation of data and thus being made aware of how to optimise self-consumption
- Notification of events by e-mail
- Data export
- Sensor evaluation
- Display and proof of a potential active power reduction by the grid operator
- Storage of log data for long-term and reliable monitoring of your PV system
- Providing system data for the KOSTAL Solar App

Prerequisites for using the Solar Portal:

- The inverter must have a connection to the Internet.
- Data transfer to KOSTAL Solar Portal must be activated in the inverter.
- The inverter must not be assigned to any other PV system in the KOSTAL Solar Portal.
- The inverter must be assigned to your PV system in the KOSTAL Solar Portal.

© 2024 KOSTAL Solar Electric GmbH

You can find more information about this on our website **www.kostal-solar-electric.com**.

KOSTAL Solar Electric

© 2024 KOSTAL Solar Electric GmbH

3.8.18 The KOSTAL Solar Plan layout software

Our free KOSTAL Solar Plan tool makes the inverter layout easier for you.

Register for KOSTAL Solar Plan free of charge using the KOSTAL Solar Terminal at **https://terminal.kostal-solar-electric.com**.

Just enter the system details and individual customer details and receive a recommendation for a suitable KOSTAL solar inverter for the planned solar system. All KOSTAL solar inverters are considered for this. In addition, the customer's electricity consumption is considered and the potential self-consumption and self-sufficiency quotas are displayed using standard load profiles.

The KOSTAL Solar Plan covers the following areas of the inverter layout:

- ***Rapid layout***
  Manual inverter layout taking account of the inverter specifications.
- ***Standard layout***
  Automatic inverter layout with possible consideration of power consumption.

As well as providing an improved inverter layout, the KOSTAL Solar Plan also supports in preparing quotations. Customer, project and installer details can be added to the technical data entered by the user and included with the quotation as a PDF overview.

You can find additional information on our website **www.kostal-solar-electric.com** in the ***Installer portal*** area.

KOSTAL Solar Terminal

© 2024 KOSTAL Solar Electric GmbH

3.8.19 KOSTAL Solar App

The free KOSTAL Solar App offers you professional monitoring of your photovoltaic system. You can use the KOSTAL Solar App to access all the functions on your smartphone or tablet at any time.

To set up and use the app, you will need access to the KOSTAL Solar Terminal and the KOSTAL Solar Portal and to have an inverter set up there. To log in to the app, use the same login details as for the KOSTAL Solar Terminal.

You can use the KOSTAL Solar App to monitor your photovoltaic system and view relevant system data both at home and when you are out and about. It allows you to access the consumption and generation data over various time periods, such as day, week, month and year, and to view your photovoltaic system's historical data. This means that with the KOSTAL Solar App you are always up to date.

Download the free KOSTAL Solar App today and benefit from new and advanced functionalities.

Additional information about this product is available on our website **www.kostal-solar-electric.com** under ***Products > Tools and applications > KOSTAL Solar App***.

Download on the App Store

KOSTAL Solar App

GET IT ON Google Play

© 2024 KOSTAL Solar Electric GmbH

4. Transport and scope of delivery

4.1 Transport and storage 57
4.2 Scope of delivery 58

© 2024 KOSTAL Solar Electric GmbH

4.1 Transport and storage

The function of the inverter has been tested and it has been carefully packaged prior to delivery. Upon receipt, check the delivery for completeness and any transport damage.

POSSIBLE DAMAGE

Potential risk of damage when setting the inverter down. Whenever possible, place the inverter on its back after unpacking.

Complaints and damage claims are to be directly addressed to the shipping company.

If stored for a longer period before installation, all inverter components must be kept dry and dust-free in the original packaging.

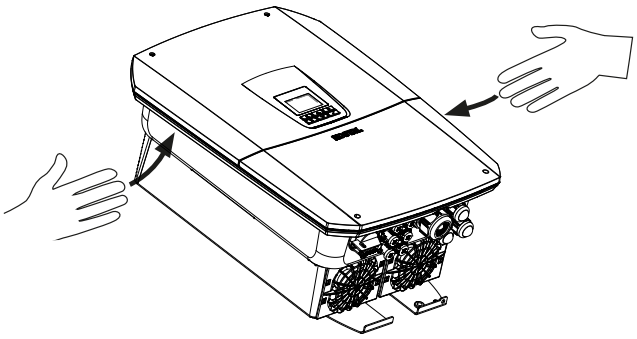

For enhanced inverter transport, use the grip strips on the left and right side of the inverter.

© 2024 KOSTAL Solar Electric GmbH

4.2 Scope of delivery

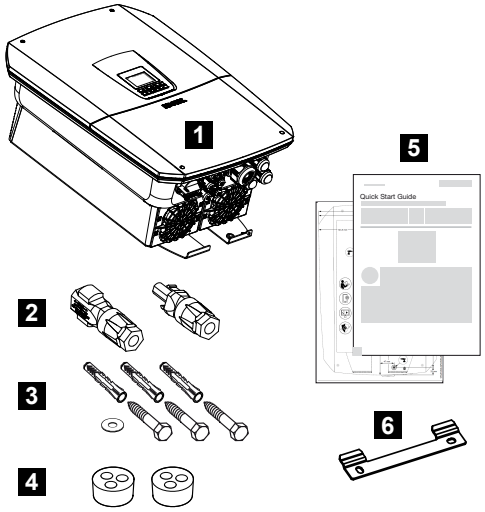

1 Inverter
2 DC plug connector (each DC input: 1× plug, 1× socket)
3 3× screws 6×50 with Duo Power 8 screw anchor and 1× washer
4 Plug seals for the cable gland of the network and signal cables
5 Quick Start Guide and drilling template
6 Wall mount

© 2024 KOSTAL Solar Electric GmbH

5. Installation

5.1 Selecting the installation site 60
5.2 Wifi installation site 62
5.3 Wall mounting 63

© 2024 KOSTAL Solar Electric GmbH

5.1 Selecting the installation site

Observe these instructions when selecting the installation site so that you select the correct one.



Protect inverter against exposure to direct sunlight.



Protect inverter from rain and splash water.



Protect inverter from falling parts which could enter the inverter's ventilation openings.

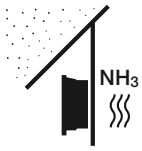

Protect the inverter against dust, contamination and ammonia gases. Rooms and areas containing livestock are not permitted as installation sites.

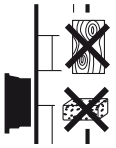

Mount inverter on a stable installation surface that can safely bear the weight. Plasterboard walls and wood planking are not permitted.



Mount inverter on a non-flammable installation surface.

WARNING! Some of the inverter components can reach temperatures of over 80 °C during operation. Select the installation site in accordance with the information provided in these instructions. Ensure that ventilation openings are always kept clear.

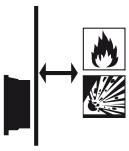

A sufficient safety distance from flammable materials and potentially explosive areas in the vicinity must be ensured.



Inverters can cause noise when in operation. Install inverter in a way that prevents people from being disturbed by operation noises.

© 2024 KOSTAL Solar Electric GmbH

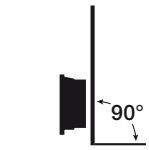

Mount inverters on vertical installation surfaces.

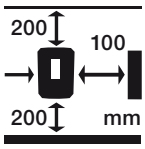

Maintain minimum distances and the necessary clearance.

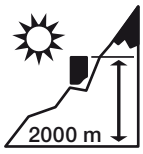

Inverter may only be installed up to an altitude of 2000 m.



The ambient temperature must be between -20 °C and +60 °C.



The air humidity must be between 4 % and 100 % (condensing).



Install inverters so that they are not accessible to children.

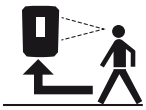

Inverters must be easily accessible and the display clearly legible.

© 2024 KOSTAL Solar Electric GmbH

5.2 Wifi installation site

The inverter can also be connected to the internet via Wifi instead of LAN. Make sure that there is also a good connection to the Wifi router at the installation site. Changing the installation location at a later date involves a lot of effort. The range is approx. 20-30 m. Walls reduce the range considerably.

The following points should be noted:

- Check in advance, e.g. with your mobile device, whether there is sufficient Wifi reception at the installation site.
- Measure the field strength. This should be as high as possible.
- If necessary, use repeaters to improve Wifi reception at the installation site.

© 2024 KOSTAL Solar Electric GmbH

5.3 Wall mounting

1. Be absolutely sure to maintain the clearance around the inverter so that it remains cool.
   The clearance must be 200 mm above and below the inverter and 100 mm at the sides.
2. Use the drilling template included to mark the drill holes on the wall.
3. To install the inverter, use the wall mount with two retaining bolts (included in scope of delivery) that are suitable for the substrate.
4. Fix the inverter to the wall at the bottom using a third bolt and washer (included in scope of delivery).

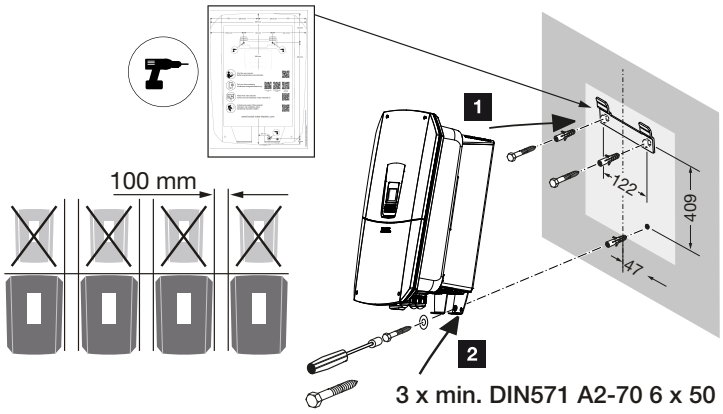

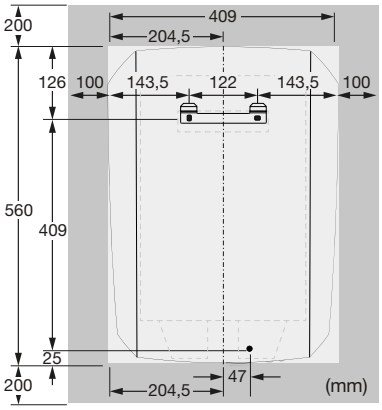

✓ The inverter is installed.

© 2024 KOSTAL Solar Electric GmbH

6. Electrical connection

6.1 Electrical connection 65
6.1.1 Connecting the mains cable 65
6.2 DC overvoltage protection (optional) 68
6.3 Energy meter connection 69
6.3.1 Connecting energy meter 70
6.4 Ripple control receiver 72
6.4.1 Overview of ripple control receiver standard connection 73
6.4.2 Overview of ripple control receiver connection via CEI control signals for Italy 73
6.4.3 Overview of ripple control receiver connection via trip control signal 74
6.4.4 Connecting ripple control receiver 75
6.5 External surge protection device (SPD) 76
6.6 Backup switch connection (optional) 79
6.7 Connection of switched outputs 83
6.7.1 Connection for self-consumption control 87
6.8 Communication connection 90
6.8.1 Connection via LAN 90
6.8.2 Connection via Wifi 92
6.9 Connecting battery 94
6.9.1 Connecting battery communication 95
6.9.2 Activation of battery input 96
6.10 Closing the inverter 98
6.11 Connecting battery's DC cables 99
6.12 Solar module connection 101
6.12.1 Note the following before connecting the DC plugs 101
6.12.2 Connecting solar modules 103

© 2024 KOSTAL Solar Electric GmbH

6.1 Electrical connection

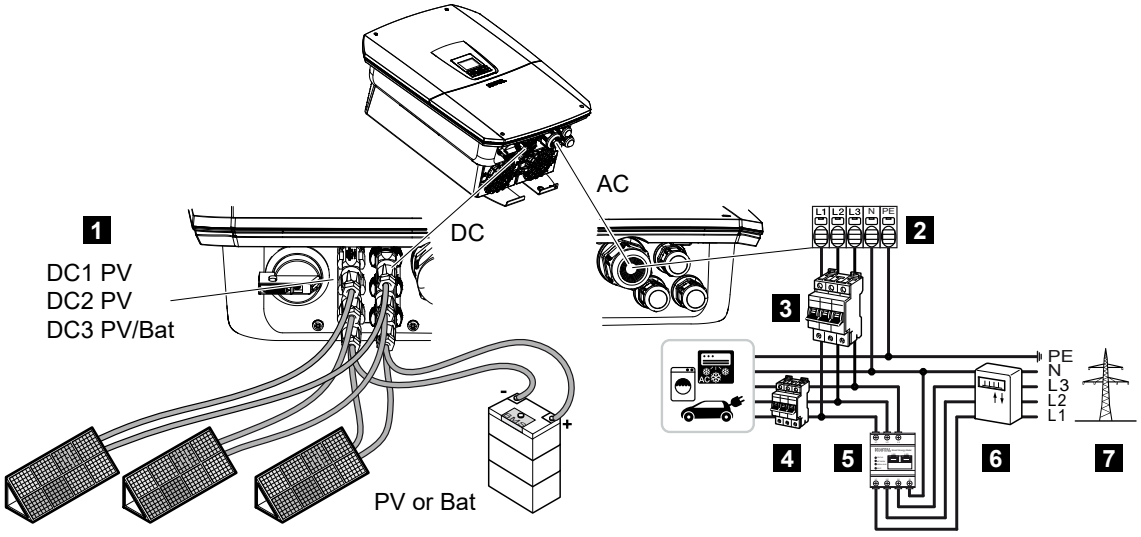

1 DC connections
2 Inverter AC terminal
3 Line circuit breaker for inverter
4 Line circuit breaker for consumers
5 KOSTAL Smart Energy Meter
6 Energy meter
7 Public grid

6.1.1 Connecting the mains cable

DANGER

Risk of death due to electrical shock and discharge!

- De-energise device and secure against being switched on again.

CAUTION

Risk of fire due to overcurrent and heating of the mains cable

If mains cables are too small, they can heat up and cause a fire.

- Use a suitable cross-section.
- Install line circuit breaker to secure against overcurrent.

© 2024 KOSTAL Solar Electric GmbH

INFO

Whenever working inside the inverter, only ever use insulated tools to prevent short-circuits.

INFO

This product may generate a direct current in the outer protective earthing conductor. A type A or B ≤ 300 mA residual current device (RCD) can be used on the AC side. Use of a type A RCD is enabled in the Webserver by going to ***Service menu*** > ***External hardware settings*** > ***Residual current protection equipment***. (Default setting: type A RCD enabled.)

INFO

Refer to the technical data for the dimensioning of the required AC line circuit breaker.

Single-wire cables (type NYY-J or NYM-J) without core end sleeves can be used with the AC terminal.

When using cables with fine wires (type H05../H07RN-F), core end sleeves must be used. Ensure that the contact length is 18 mm.

1. Switch the DC switch on the inverter to ***OFF***.
2. De-energise the house grid.
3. Secure home fuses against reactivation.
4. Remove screws on the bottom cover and take off the cover.
5. Press the lock together and remove the terminal compartment's cover.

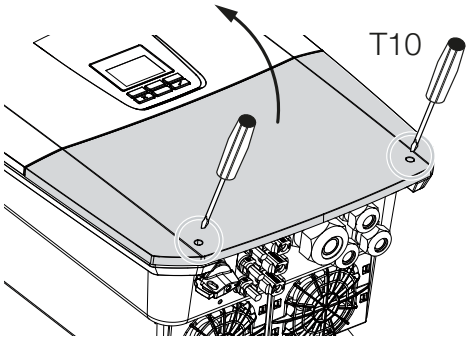

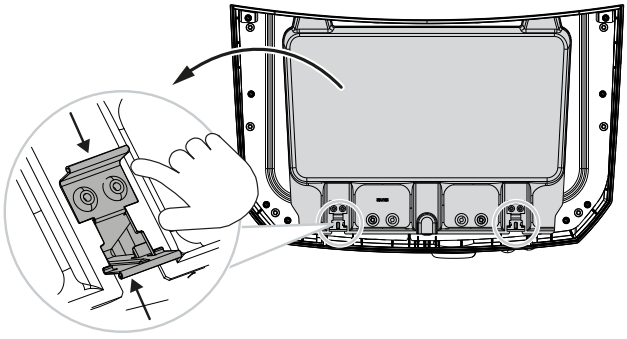

6. Correctly lay the mains cable from the power distributor to the inverter.
7. Insert mains cable into the inverter and seal with sealing ring and union nut. The sealing ring can be adapted to the mains cable by peeling off the individual sealing rings from the inside to the outside. Tighten union nut to the prescribed torque.

© 2024 KOSTAL Solar Electric GmbH

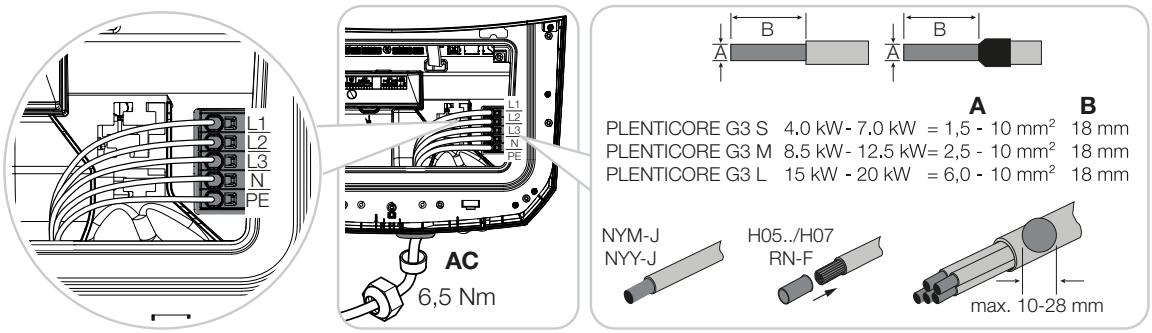

8. When threaded connections are not used, leave the sealing ring in the threaded connections.
9. Connect the wires of the mains cable to the AC terminal in accordance with the labelling.
   To connect the AC cables, the inverter is equipped with spring-loaded terminal strips. The wires should be inserted into the large round openings of the terminal. Core end sleeves should be used with stranded cables.
10. Install a residual current device and line circuit breaker in the mains cable between the inverter and the feed meter to protect it against overcurrent.
11. In countries in which a second PE connection is required, connect this at the marked place on the housing (outside).

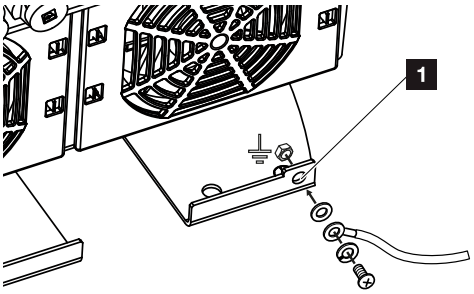

✓ The AC connection is connected.

© 2024 KOSTAL Solar Electric GmbH

6.2 DC overvoltage protection (optional)

There is an optional type 2 overvoltage module available for the inverter, which can be plugged into the inverter. This better protects the inverter from damage due to overvoltage, for example from lightning strikes in the vicinity of the PV system.

It is simply installed via plug and play.

The module is automatically detected in the inverter and is displayed in the Webserver. No further settings are needed.

For a DC overvoltage protection module to be detected, first of all there has to be sufficient PV energy available after it is installed.

Follow the supplied instructions for the DC overvoltage protection module.

1. Switch the DC switch on the inverter to ***OFF***.
2. De-energise the inverter and secure it against being switched back on.
3. Remove the dummy cover from the inverter. Keep it for times when there is no DC overvoltage protection module installed to stop the slot being touched.

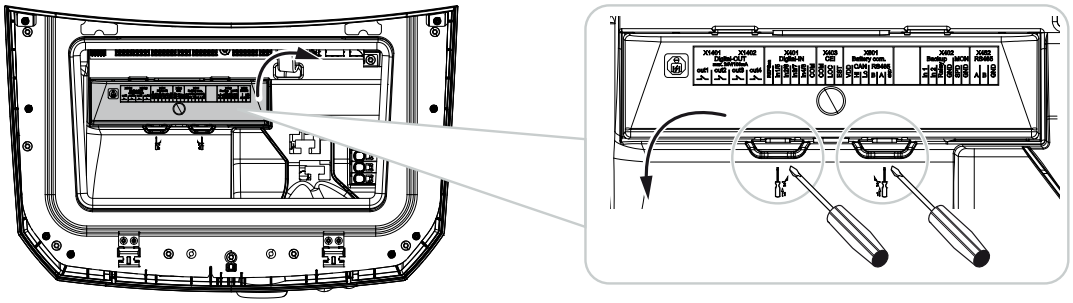

4. Insert the DC overvoltage module in the slot until it engages.

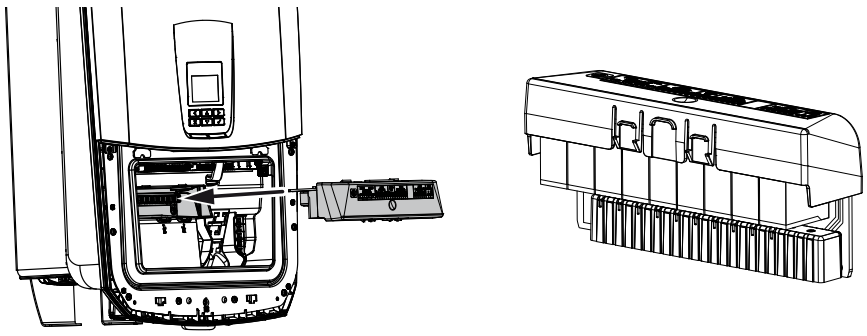

✓ The DC overvoltage module is installed.

© 2024 KOSTAL Solar Electric GmbH

6.3 Energy meter connection

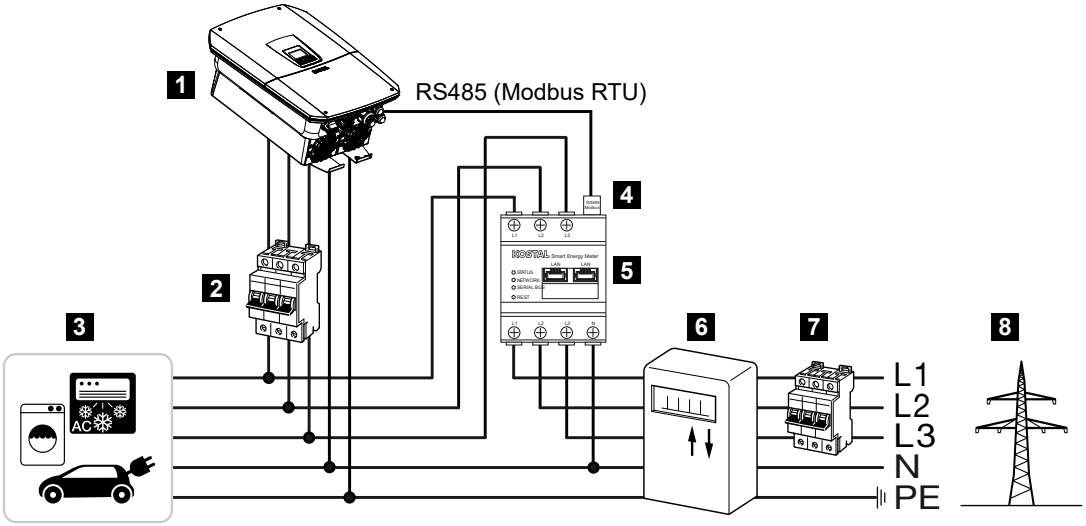

1 Inverter
2 Line fuse for inverter
3 Consumer device
4 RS485 (Modbus RTU) communication cable between energy meter and inverter
5 Digital energy meter (Modbus RTU)
6 Purchase and feed meter or smart meter
7 Line fuse for house
8 Public grid

© 2024 KOSTAL Solar Electric GmbH

6.3.1 Connecting energy meter

The energy meter is installed on a top-hat rail in the meter box or the main distributor.

DANGER

Risk of death due to electrical shock and discharge!

- De-energise device and secure against being switched on again.

INFO

Only energy meters which have been approved for the inverter by KOSTAL Solar Electric may be used.

You will find an **up-to-date list of approved energy meters** in the download area for the product on our website.

INFO

The communication cable is subject to the following requirements:

Conductor cross-section from 0.2 to 1.5 mm^2

Max. length 30 m

Length of stripped insulation 8 mm

Observe the specifications for cable cross-sections in the instructions for the energy meter.

The energy meter must be installed at the grid connection point in the house grid. The installation position is queried and set in the installation wizard or can be set in the Webserver.

1. Switch the DC switch on the inverter to ***OFF***.
2. De-energise the house grid and secure it against being switched back on.
3. Fit the energy meter on the top-hat rail in the control cabinet or power distributor.
4. Correctly route the communication cable from the inverter to the control cabinet and connect to the energy meter following the wiring diagram provided by the manufacturer.
5. Connect communication cable in inverter to terminal for energy meter.

© 2024 KOSTAL Solar Electric GmbH

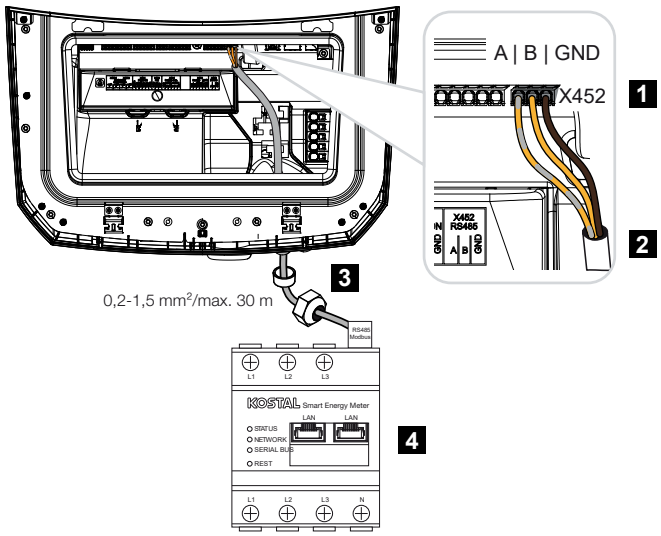

1 Terminal for energy meter (Modbus RTU)
2 Communication cable to energy meter
3 Sealing ring with union nut
4 Energy meter

✓ The energy meter is connected.

The type of energy meter used is selected when the inverter is first installed or can be set using the inverter menu or Webserver.

© 2024 KOSTAL Solar Electric GmbH

6.4 Ripple control receiver

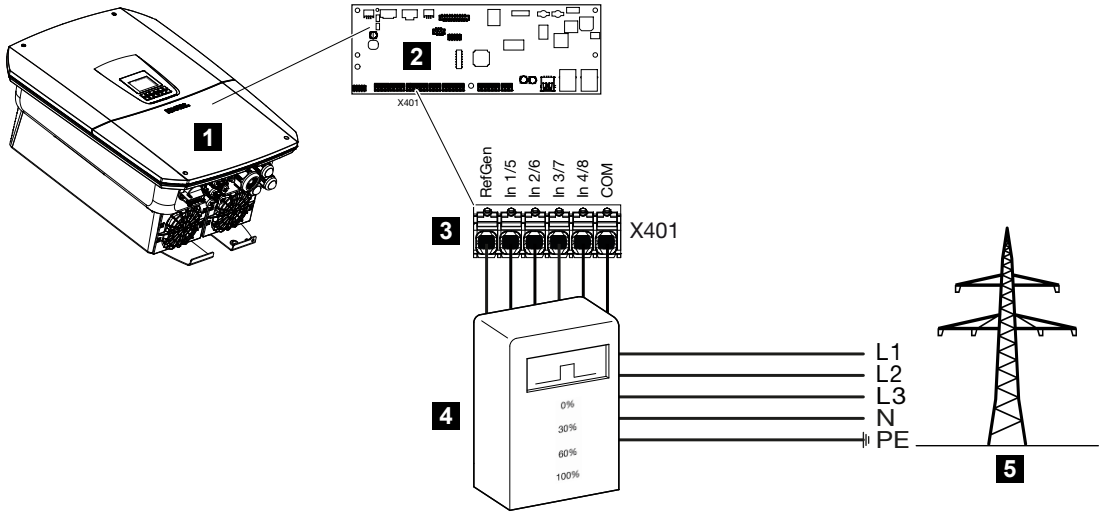

1 Inverter
2 Smart Communication Board (SCB)
3 Terminal X401 for ripple control receiver control line
4 Ripple control receiver
5 Energy supply company

Several energy supply companies offer the owners of PV systems the possibility of regulating their system with variable active power control and thus increasing the feed-in into the public grid to up to 100%.

INFO

In some applications, a compatible energy meter may be seen as an attractively priced alternative to the ripple control receiver. Here the feed-in may well be limited by the energy supply company, but the inverter controls the flow of energy (self-consumption in house grid and feed-in to the public grid) in such a way that the self-produced energy is not lost or loss is kept to an absolute minimum.

Dynamic active power control can be activated in the inverter via the Webserver.

Ask your energy supply company or installer what application rule applies to you or whether there is an alternative (e.g. smart meter) better suited to you.

If a ripple control receiver is already connected to another KOSTAL inverter in your house network, you can use the control signals of this ripple control receiver. In order to do this, receipt of broadcast control signals must be activated in the Webserver by going to ***Service menu*** > ***Energy management***.

You can find more information under **Active power control, Page 215**

© 2024 KOSTAL Solar Electric GmbH

6.4.1 Overview of ripple control receiver standard connection

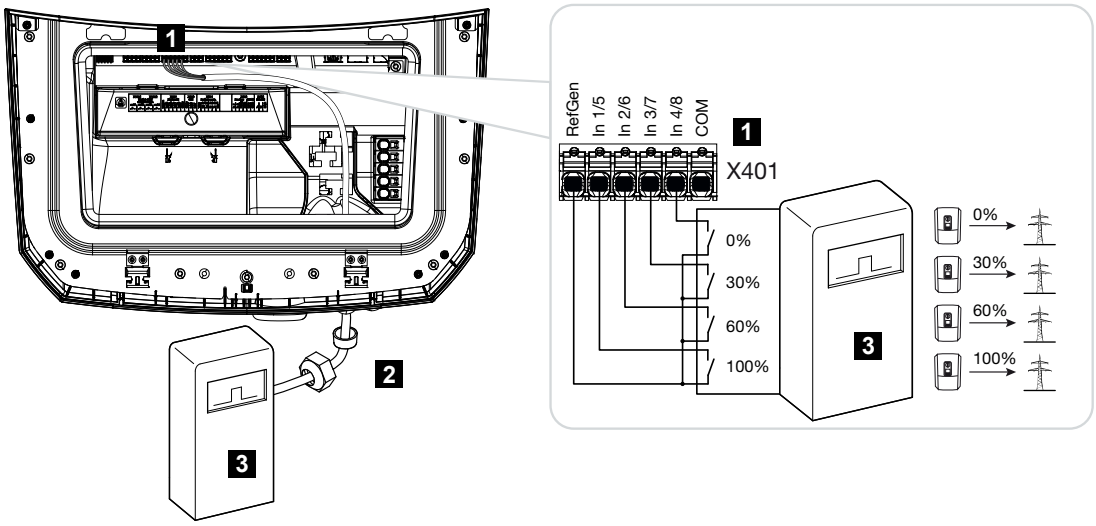

1 X401 terminal
2 Control line from ripple control receiver to inverter with sealing ring and union nut
3 Ripple control receiver

6.4.2 Overview of ripple control receiver connection via CEI control signals for Italy

For Italy, the ripple control receiver is connected as follows.

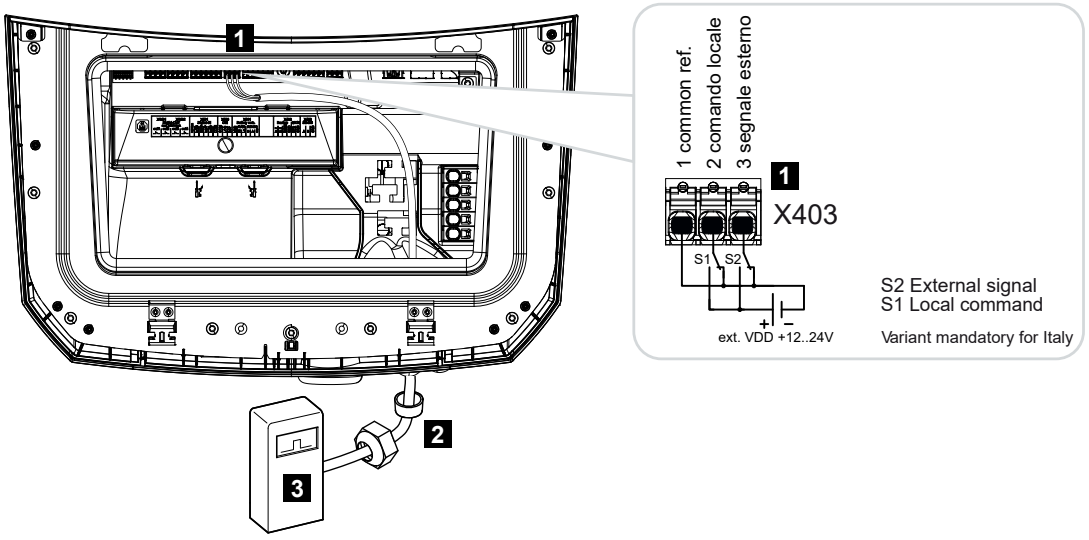

1 Terminal X403
2 Control line from ripple control receiver to inverter with sealing ring and union nut

© 2024 KOSTAL Solar Electric GmbH

3 Ripple control receiver Italy

INFO

For Italy (standard CEI0-21), there must be no voltage applied to terminal X403 (VDD).

Connection to an external voltage source and a changeover switch to GND is mandatory here.

6.4.3 Overview of ripple control receiver connection via trip control signal

If the inverter is going to be controlled by the energy supplier using an external trip control signal, this is connected to the inverter as follows. This function requires no further settings in the inverter's Webserver.

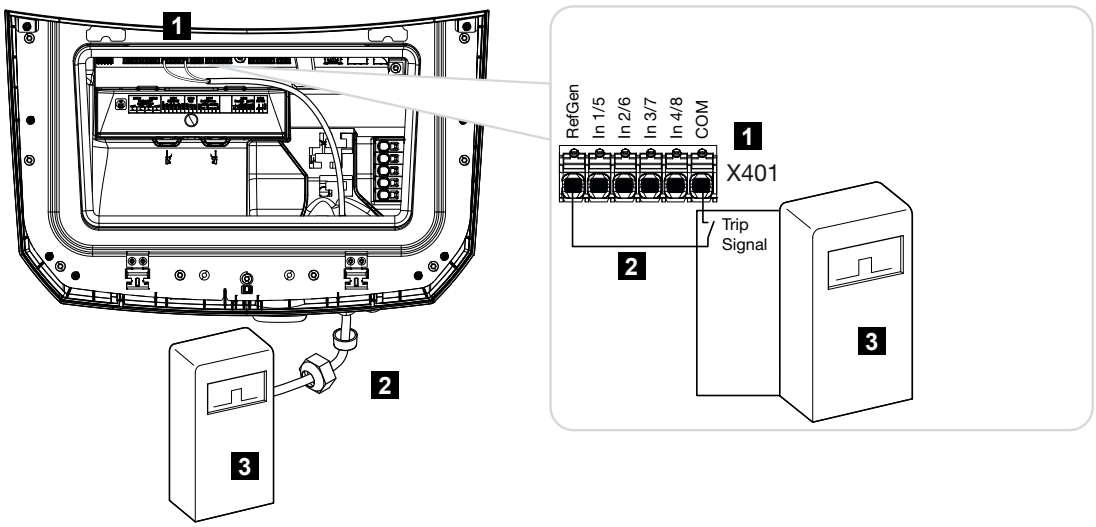

1 X401 terminal

2 Control line from ripple control receiver to inverter with sealing ring and union nut

3 Ripple control receiver from the energy supply company with trip signal

© 2024 KOSTAL Solar Electric GmbH

6.4.4 Connecting ripple control receiver

DANGER

Risk of death due to electrical shock and discharge!

- De-energise device and secure against being switched on again.

Perform the following steps:

1. Switch the DC switch on the inverter to ***OFF***.
2. De-energise the house grid and secure it against being switched back on.
3. Fit ripple control receiver in control cabinet or power distributor.
4. Correctly route the communication cable from the inverter to the control cabinet and connect to the ripple control receiver following the wiring diagram provided by the manufacturer.
5. Connect communication cable in inverter to terminal for ripple control receiver (torque: 0.2 Nm).
6. Once the inverter has undergone initial commissioning, the ripple control receiver must be configured in the Webserver. Forwarding of the ripple control receiver's signals (distribution of broadcast control signals) to other inverters in the same house grid can also be activated.

✓ The ripple control receiver is connected.

© 2024 KOSTAL Solar Electric GmbH

6.5 External surge protection device (SPD)

To protect the PV system from overvoltages, a surge protection device (SPD) should be installed on the DC side between the inverter and the PV generator and another should be installed on the AC side between the inverter and the grid.

If you have installed the optional internal DC overvoltage protection module in the inverter, no additional external protection is required on the DC side.

The inverter can evaluate available external surge protection devices and can issue a message if an event occurs. For this to work, connect the message output of the external overvoltage protection module(s) without potential (potential-free) to the monitor input at the inverter's X402 terminal.

After commissioning the inverter, the external evaluation of the surge protection device must be configured in the Webserver as normally open (NO) or normally closed (NC).

External surge protection device as normally closed

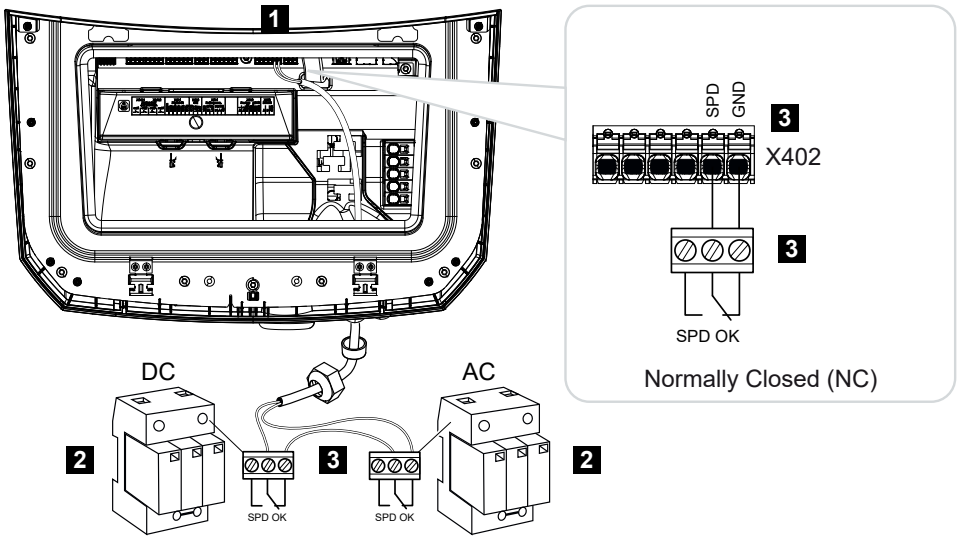

1 Connection of terminal X402 for Smart Communication Board (SCB)

2 Surge protection devices (SPD) for AC and DC side

3 Control line from SPD to inverter

© 2024 KOSTAL Solar Electric GmbH

External surge protection device as normally open

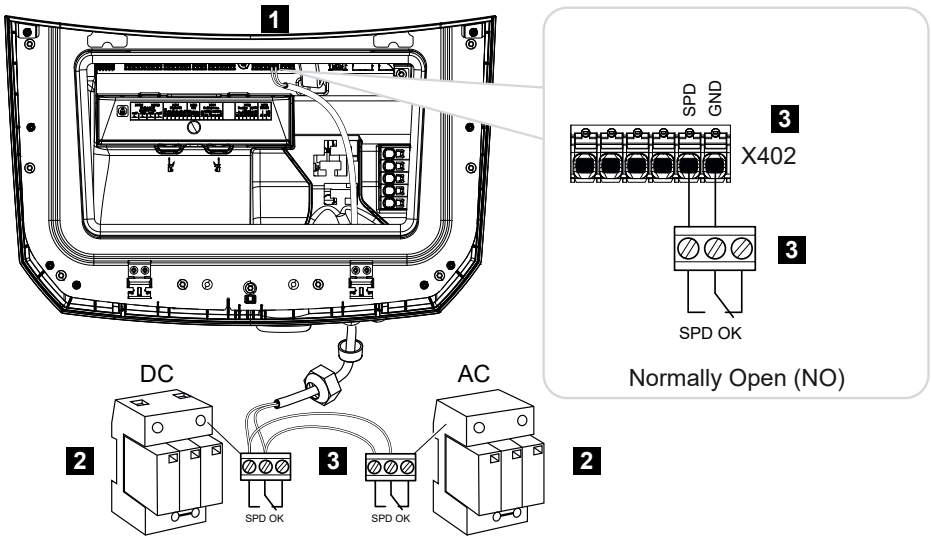

1 Connection of terminal X402 for Smart Communication Board (SCB)
2 Surge protection devices (SPD) for AC and DC side
3 Control line from SPD to inverter

Carry out the following steps to connect the signal cable

DANGER

Risk of death due to electrical shock and discharge!

- De-energise device and secure against being switched on again.

INFO

The signal cable is subject to the following requirements:

Conductor cross-section from 0.2 to 1.5 mm^2

Max. length 30 m

Length of stripped insulation 8 mm

Observe the specifications for cable cross-sections in the manufacturer's instructions.

1. Switch the DC switch on the inverter to ***OFF***.
2. De-energise the house grid and secure it against being switched back on.
3. Install the SPD for AC and DC in the control cabinet or power distributor.

© 2024 KOSTAL Solar Electric GmbH

4. Correctly route the signal cable from the inverter to the control cabinet and connect to the SPD following the wiring diagram provided by the manufacturer.
   With two SPDs, pay attention to how the signal cables are connected to each other: in series (for NC) or in parallel (for NO).
5. Connect the communication cable in the inverter to terminal X402 for the surge protection device.
6. Once initial commissioning has been completed for the inverter, the overvoltage protection must be activated and configured in the Webserver (evaluation of overvoltage protection).

✓ The message contact for the external SPD is connected.

Activating evaluation of the external message signal from the SPD

INFO

The IP address can be read on the inverter's display.

1. Call up the Webserver. To do this, enter the IP address of the inverter in the address bar of the Internet browser and confirm with ***ENTER***.

➔ The Webserver page is opened.

2. Log in to the Webserver as an ***installer***.
3. Select the menu item ***Service menu*** > ***General*** > ***Overvoltage protection*** .

➔ The ***Overvoltage protection*** page opens.

4. Activate ***Evaluation of the external message signal (terminal X402)***.
5. Under ***Signal is wired as***, select the function ***normally open (NO)*** or ***normally closed (NC)***.
6. Click on the ***Save*** button.

✓ The function is active.

© 2024 KOSTAL Solar Electric GmbH

6.6 Backup switch connection (optional)

If a battery is connected to the inverter, the inverter offers the option of continuing to supply the house grid with energy using the PV and battery should the mains supply fail.

For this purpose, a manual or automatic backup box must be installed in the house grid at the grid connection point.

KOSTAL offers the **KOSTAL BackUp Switch** as a manual variant, which disconnects the public grid from the house grid in backup mode.

Automatic backup boxes are offered as accessories by other suppliers.

You will find a list of approved KOSTAL Solar Electric **accessories** on our website in the download area for the product.

Connection of communication cable in the inverter for the KOSTAL BackUp Switch

System overview

The KOSTAL BackUp Switch is connected differently depending on the country and the energy supplier. Ask your energy supplier which type of connection you require.

Left: Neutral point setup required. **Separation of the neutral conductor** from the public grid with the KOSTAL BackUp Switch in backup mode.

Right: Neutral point setup not required. **No neutral conductor separation** from the public grid with the KOSTAL BackUp Switch in backup mode.

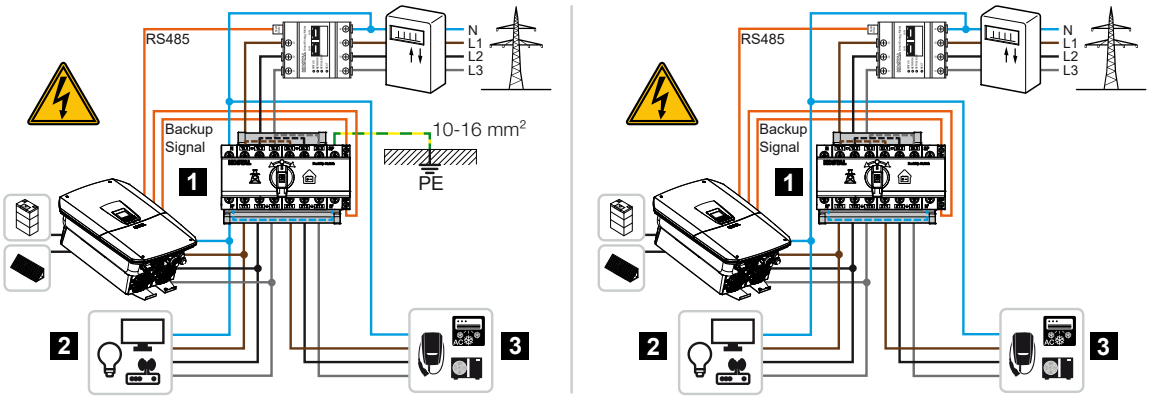

1 KOSTAL BackUp Switch
2 Consumers in grid mode and backup mode
3 Consumers in grid mode

© 2024 KOSTAL Solar Electric GmbH

INFO

The communication cable is subject to the following requirements:

Conductor cross-section from 0.2 to 1.5 mm^2

Max. length 30 m

Length of stripped insulation 8 mm

Observe the specifications for cable cross-sections in the manufacturer's instructions.

1. Follow the supplied instructions for the KOSTAL BackUp Switch.
2. Switch the DC switch on the inverter to ***OFF***.
3. De-energise the house grid and secure it against being switched back on.
4. Install the KOSTAL BackUp Switch on the top-hat rail in the control cabinet or power distributor.
5. Lay the backup signal cable correctly from the inverter into the control cabinet and connect it to the KOSTAL BackUp Switch.
6. Connect the backup signal cable in the inverter to the terminal for the backup function (terminal X402).

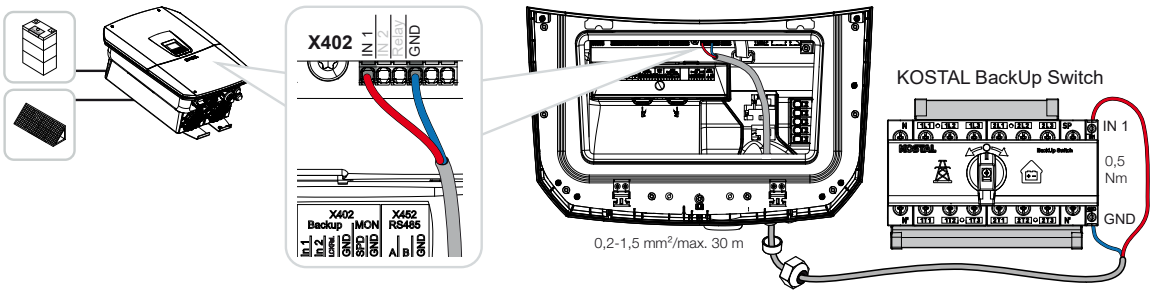

✓ The KOSTAL BackUp Switch signal cable is connected.

Use of the KOSTAL BackUp Switch is selected when the inverter is initially installed, or it can be selected via the Webserver by going to ***Service menu – General > Operating mode > Change operating mode***.

Connection of the communication cable in the inverter for the automatic backup box

System overview

The connection may be different depending on the country, grid connection, energy supplier and backup box manufacturer. Therefore, follow the backup box manufacturer's specifications precisely.

© 2024 KOSTAL Solar Electric GmbH

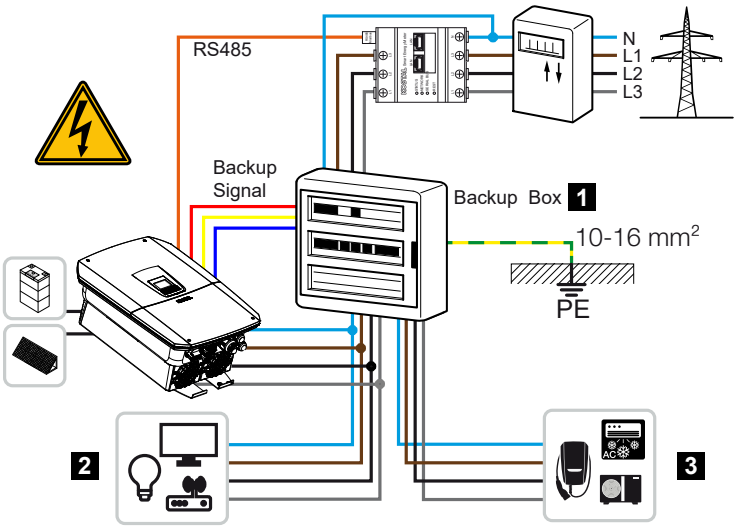

1 Backup box
2 Consumers in grid mode and backup mode
3 Consumers in grid mode

INFO

The communication cable is subject to the following requirements:

Conductor cross-section from 0.2 to 1.5 mm²

Max. length 30 m

Length of stripped insulation 8 mm

Observe the specifications for cable cross-sections in the manufacturer's instructions.

1. Follow the supplied instructions for the backup box.
2. Switch the DC switch on the inverter to ***OFF***.
3. De-energise the house grid and secure it against being switched back on.
4. Mount and install the automatic backup box in the house network in accordance with the manufacturer's specifications.
5. Route the backup signal cable correctly from the inverter to the automatic backup box and connect it to the backup box in accordance with the manufacturer's connection plan.
6. Connect the backup signal cable in the inverter at the terminal for the backup box (terminal X402).

© 2024 KOSTAL Solar Electric GmbH

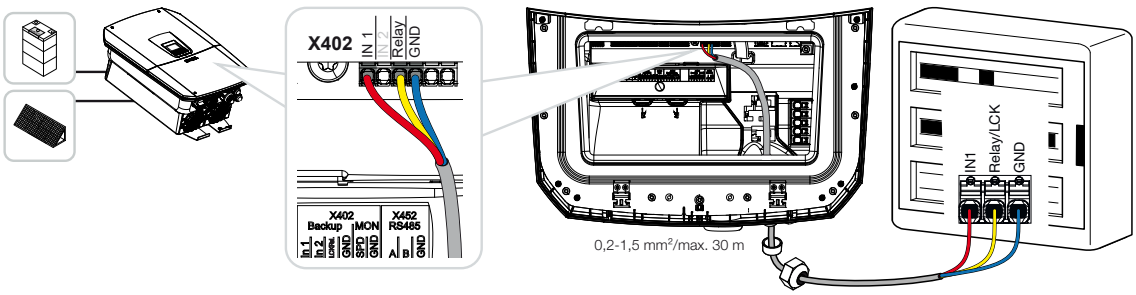

✓ The automatic backup box's signal cable is connected.

Use of the automatic backup box is selected when the inverter is initially installed, or it can be selected via the Webserver by going to ***Service menu – General > Operating mode > Change operating mode***.

© 2024 KOSTAL Solar Electric GmbH

6.7 Connection of switched outputs

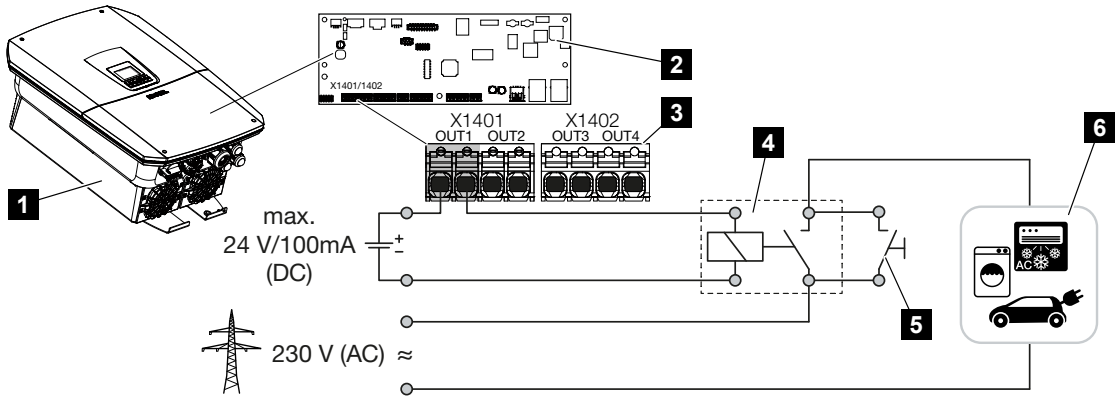

1 Inverter
2 Smart Communication Board
3 Terminal with four switched outputs (OUT 1-4)
4 Load relay
5 Jumper switch
6 Consumers/actuators

The inverter allows consumers to be connected to it via an external load relay, which can be switched on when there is sufficient PV or grid surplus feed-in power and thereby use the PV energy generated at that point in time.

If there is an event message, the inverter can trigger an actuator connected to the switched output (warning light, message signal, smart home system), providing information about the event that occurred.

More information about configuration **Switched outputs, Page 202**.

© 2024 KOSTAL Solar Electric GmbH

Electrical connection of switched output

Check which connection method is required for the external device. For more information, please refer to the manual of the device to be controlled.

Switched output for 230 V loads via load relay:

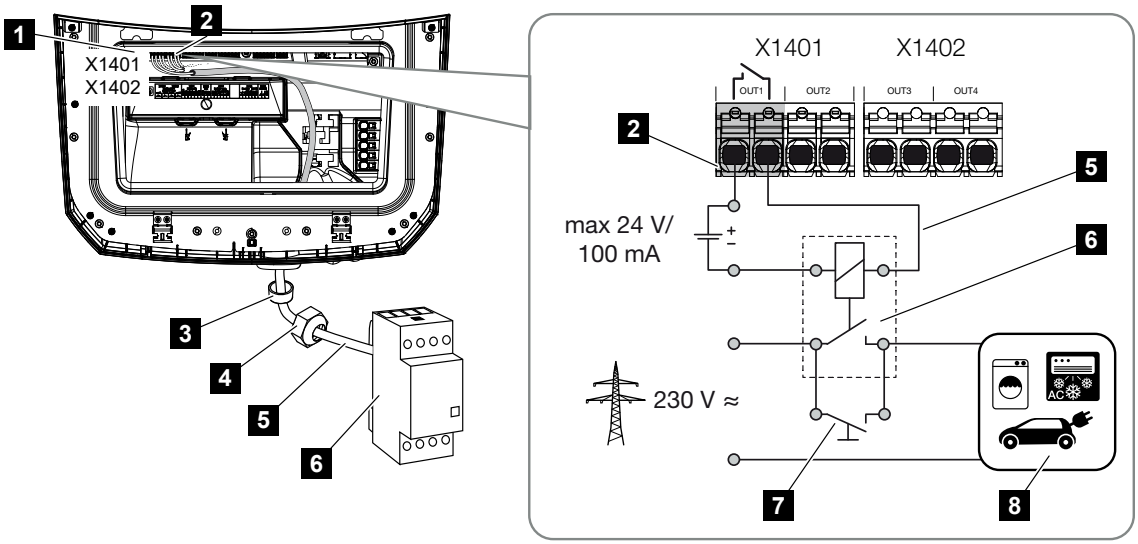

1 Smart Communication Board (SCB)
2 Terminal for self-consumption control
3 Sealing ring
4 Union nut
5 Control line
6 Load relay/connection via potential-free contact
7 Jumper switch
8 Consumer device

Use of a load relay to decouple and control 230 V loads.

- ***Load control operating mode:*** Here, an external load (e.g. washing machine or air conditioning system) is triggered.
- ***Events operating mode:*** As soon as an event is present, an external load (e.g. lamp or signal horn) is triggered.

© 2024 KOSTAL Solar Electric GmbH

Switched output for external devices via potential-free contact:

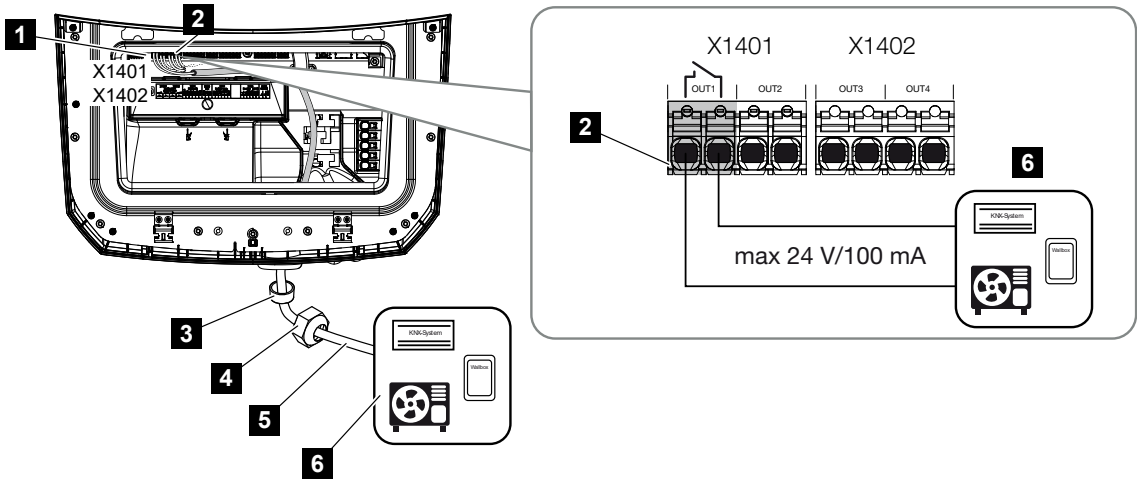

1 Smart Communication Board (SCB)
2 Terminal for self-consumption control
3 Sealing ring
4 Union nut
5 Control line
6 Load relay/connection via potential-free contact

Connection of external devices, for example a heat pump, wallbox or smart home system input module, directly to the digital input's switched output.

- ***SG Ready operating mode:*** Here, the switching signal (e.g. contact closes) for using the PV energy is routed directly to the heat pump's digital input.
- ***Wallbox operating mode:*** The charging process is started as soon as the contact is closed. The wallbox offers a digital/signal input for this purpose.
- ***Events/external control operating mode:*** The external device is controlled via a digital/signal input. This can be, for example, a KNX control unit or another smart home system.

© 2024 KOSTAL Solar Electric GmbH

To connect the electrical switched output, follow the steps below:

DANGER

Risk of death due to electrical shock and discharge!

- De-energise device and secure against being switched on again.

INFO

Damage to the inverter

If loads need to be switched and require a higher load at the switched output than 24 V/ 100 mA, an external load relay must be installed between the inverter and the consumer. No consumers may be connected directly to the inverter.

If there are loads or consumers that are controlled via a potential-free switching contact (e.g. SG-ready heat pump control or smart home systems), these consumers can be connected directly to the switched output.

Switched output load, potential-free:
Max. load: 100 mA
Max. voltage: 24 V (DC)

INFO

The signal cable is subject to the following requirements:

Conductor cross-section from 0.2 to 1.5 mm^2

Length of stripped insulation 8 mm

1. De-energise the house grid.
2. Connect the load relay or consumer correctly to one of the switched outputs (e.g. OUT1) at the Smart Communication Board.
3. Correctly install and connect the other self-consumption control components.

✓ The electrical connection is complete.

© 2024 KOSTAL Solar Electric GmbH

6.7.1 Connection for self-consumption control

The inverter offers the option of connecting consumers to the inverter via an external load relay or directly to the switched outputs (e.g. OUT1).

If the PV or grid excess power is sufficiently high, the switched output is then switched on to access the PV energy that is currently being generated.

Connection options:

- Use of a load relay to decouple and control 230 V loads.
- Direct connection to the switched output of the digital input, e.g. for a heat pump or wallbox, or to the input module of a smart home system.

Check which connection method is required for the device. For more information, please refer to the manual of the device to be controlled.

Connection example with load relay:

- ***Load control operating mode:*** Here, an external load (e.g. washing machine or air conditioning system) is triggered.
- ***Events operating mode:*** As soon as an event is present, an external load (e.g. lamp or signal horn) is triggered.

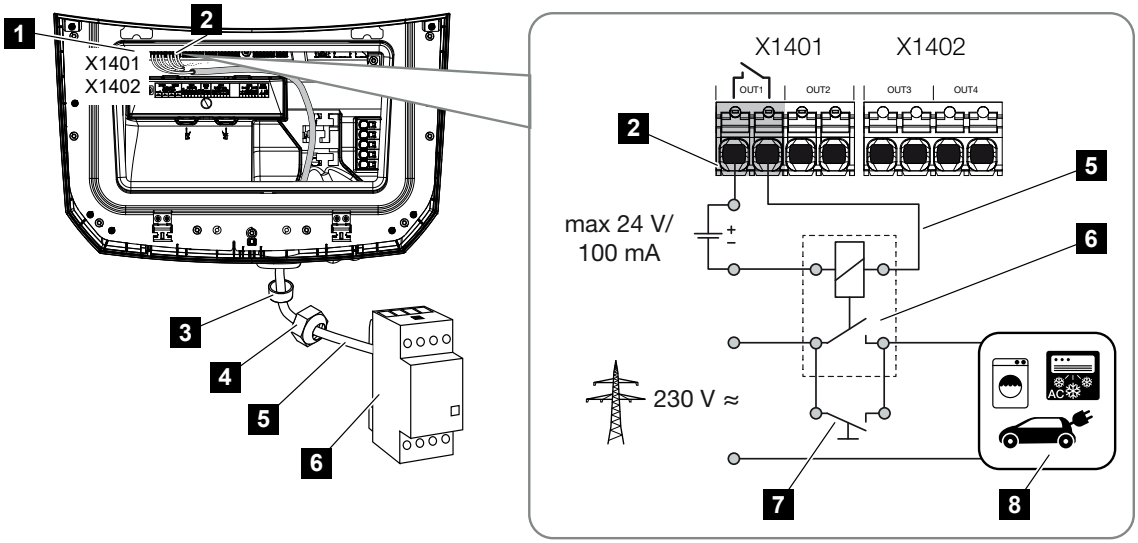

1 Smart Communication Board (SCB)
2 Terminal for self-consumption control
3 Sealing ring
4 Union nut
5 Control line
6 Load relay/connection via potential-free contact
7 Jumper switch

© 2024 KOSTAL Solar Electric GmbH

8 Consumer device

Connection example, direct connection to the switched output via potential-free contact:

- ***SG Ready operating mode:*** Here, the switching signal (e.g. contact closes) for using the PV energy is routed directly to the heat pump's digital input.
- ***Wallbox operating mode:*** The charging process is started as soon as the contact is closed. The wallbox offers a digital/signal input for this purpose.
- ***Events/external control operating mode:*** The external device is controlled via a digital/signal input. This can be, for example, a KNX control unit or another smart home system.

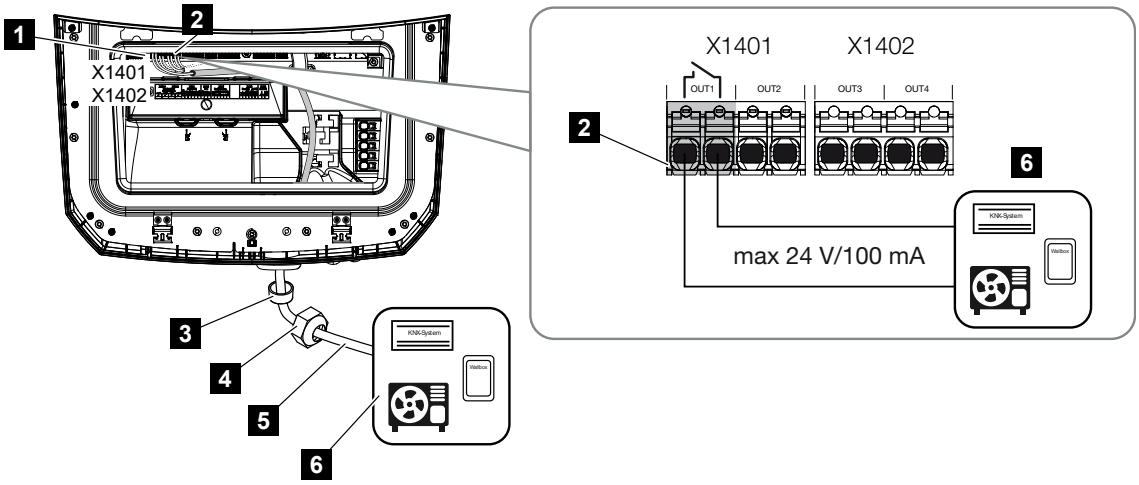

1 Smart Communication Board (SCB)
2 Terminal for self-consumption control
3 Sealing ring
4 Union nut
5 Control line
6 Load relay/connection via potential-free contact

For the electrical connection of the self-consumption control, proceed as follows:

DANGER

Risk of death due to electrical shock and discharge!

- De-energise device and secure against being switched on again.

© 2024 KOSTAL Solar Electric GmbH

INFO

Damage to the inverter

If loads need to be switched and require a higher load at the switched output than 24 V/ 100 mA, an external load relay must be installed between the inverter and the consumer. No consumers may be connected directly to the inverter.

If there are loads or consumers that are controlled via a potential-free switching contact (e.g. SG-ready heat pump control or smart home systems), these consumers can be connected directly to the switched output.

Switched output load, potential-free:
Max. load: 100 mA
Max. voltage: 24 V (DC)

INFO

The signal cable is subject to the following requirements:

Conductor cross-section from 0.2 to 1.5 mm^2

Length of stripped insulation 8 mm

1. Switch the DC switch on the inverter to ***OFF***.
2. De-energise the house grid and secure it against being switched back on.
3. Connect the load relay or consumer correctly to the self-consumption control terminal on the Smart Communication Board.
4. Correctly install and connect the other self-consumption control components.

✓ The electrical connection for self-consumption control has been made. Switch on the inverter.

© 2024 KOSTAL Solar Electric GmbH

6.8 Communication connection

The inverter offers two ways to connect to other devices, the local home network or the Internet. Two LAN interfaces and Wifi are available in the inverter for this purpose.

- **Connection via LAN, Page 90**
- **Connection via Wifi, Page 92**

6.8.1 Connection via LAN

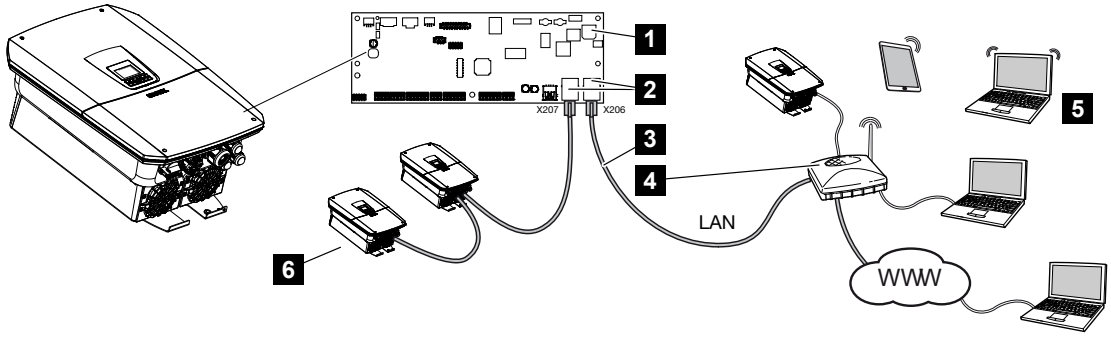

1 Smart Communication Board
2 RJ45 connection sockets (Ethernet/LAN)
3 LAN cable
4 Router with access to the Internet
5 Computer/router/tablet/KOSTAL inverter (for configuration or data retrieval)
6 Other devices connected via LAN, e.g. KOSTAL solar inverter

The Smart Communication Board is the inverter's communication hub. Computers, routers, switches and/or hubs can be connected to the RJ45 connections.

If the Ethernet cable is connected to a router, the inverter is integrated into the local network and can be contacted by all computers or KOSTAL inverters incorporated into the same network.

Additional LAN devices can be connected via the second LAN interface in the inverter. Here, the inverter serves as a switch.

© 2024 KOSTAL Solar Electric GmbH

Connecting communication

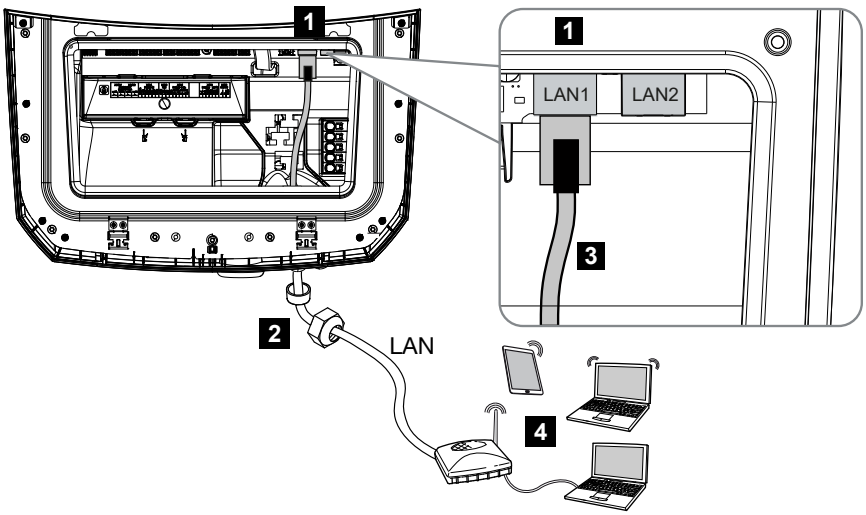

1 LAN connection (RJ45 Ethernet)
2 Sealing ring with union nut
3 LAN cable
4 Computer (for configuration or data retrieval)

DANGER

Risk of death due to electrical shock and discharge!

- De-energise device and secure against being switched on again.

INFO

For connection with a computer or computer network (Ethernet 10BaseT, 10/100 Mbit/s), an Ethernet cable of category 5 (Cat 5e, FTP) or better with a max. length of 100 m is to be used.

1. Switch the DC switch on the inverter to ***OFF***.
2. De-energise the inverter and secure it against being switched back on.
3. Guide the Ethernet cable into the inverter.
4. Seal with sealing ring and union nut. Tighten union nut to the prescribed torque. Tightening torque: 8 Nm (M25).
5. Connect Ethernet cable to LAN interface of Smart Communication Board.
6. Connect the Ethernet cable to the computer or router.

✓ The inverter is connected to the internal network.

© 2024 KOSTAL Solar Electric GmbH

6.8.2 Connection via Wifi

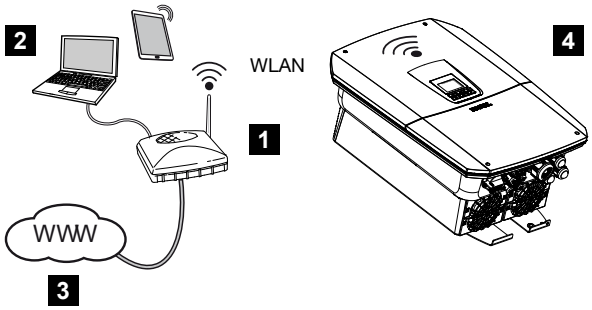

1 Router (WiFi/LAN) in the home network with access to the Internet
2 Computer/tablet (for configuration or data retrieval)
3 Internet
4 Inverter with WLAN client

If you want to connect the inverter to the home network via WLAN, it is important to have a sufficiently strong signal quality at the installation site.

The inverter can also be used as a WLAN bridge for other devices (e.g. KOSTAL Smart Energy Meter, battery storage unit).

Connect the additional devices to the two LAN interfaces on the Smart Communication Board in the inverter.

The connection to the router can be configured during the initial installation or later via the inverter's Webserver.

To do this, the Wifi interface in the inverter must be set to ***Client mode*** via the Webserver under ***Settings > Network > Wifi > Wifi mode*** and a wireless network must be selected.

Using the inverter as a WLAN bridge

If there are several KOSTAL inverters in a system, the inverter can be used as a WLAN bridge to the existing WLAN router. For this function to work, ***bridge mode*** needs to be activated in the inverter by going to ***Settings > Network***.

Inverters, energy meters or battery storage units can be connected via LAN cable to the inverter serving as a WLAN bridge to establish a connection to the local home network and beyond.

© 2024 KOSTAL Solar Electric GmbH

Connecting other devices to the WLAN bridge

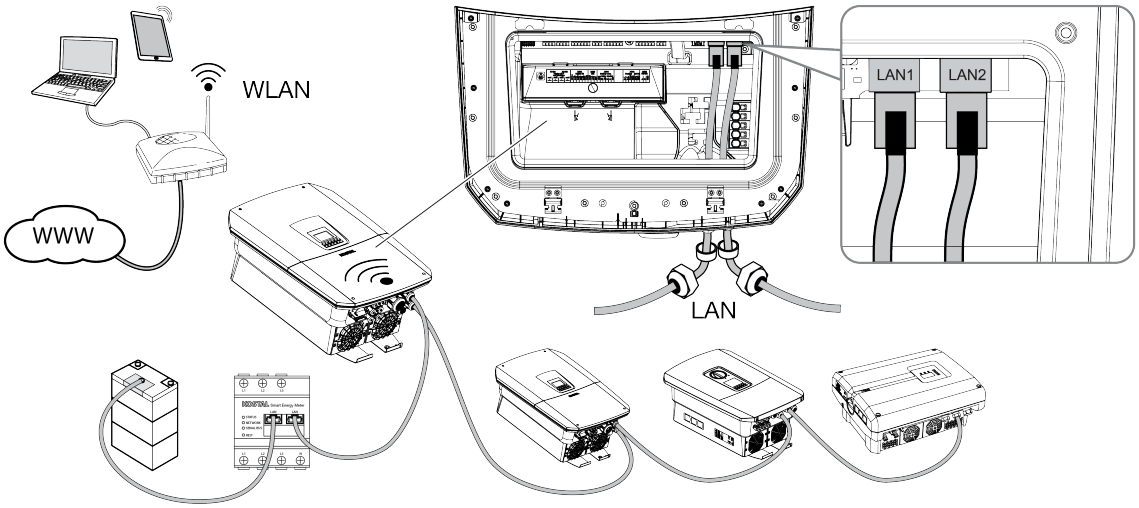

DANGER

Risk of death due to electrical shock and discharge!

- De-energise device and secure against being switched on again.

INFO

A Category 5 Ethernet cable (Cat 5e, FTP) or better with a max. length of 100 m is required to connect other devices.

INFO

Do not activate the WLAN bridge mode if the inverter is already connected to a router via LAN.

1. Switch the DC switch on the inverter to ***OFF***.
2. De-energise the inverter and secure it against being switched back on.
3. Guide the Ethernet cable into the inverter.
4. Seal with sealing ring and union nut. Tighten union nut to the prescribed torque. Tightening torque: 8 Nm (M25).
5. Connect the Ethernet cable to the LAN interface of the external device, e.g. inverter, energy meter or battery.
6. Connect other devices via Ethernet cable.

✓ The external devices are connected. After initial commissioning, the WLAN interface must be configured in the inverter and bridge mode must be activated.

© 2024 KOSTAL Solar Electric GmbH

6.9 Connecting battery

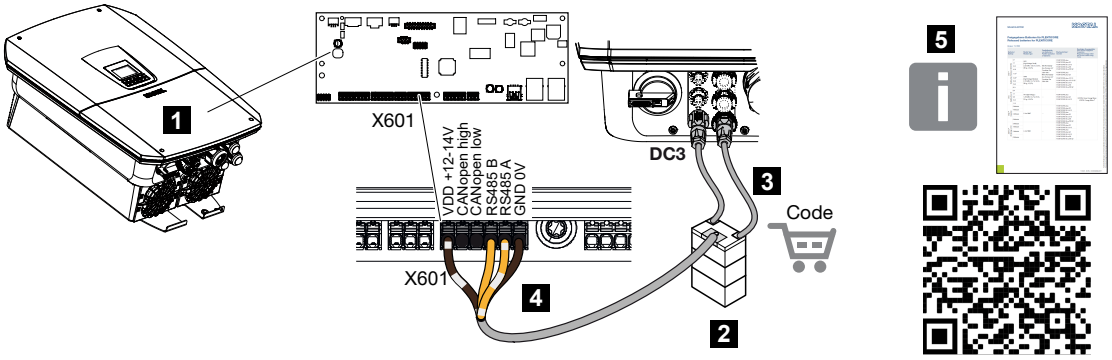

1 Inverter
2 Battery storage with battery management system
3 DC cables for battery storage
4 Communication cable to battery storage
5 Approved batteries

On the inverter, you can connect a battery storage system to DC input 3 in place of a PV string.

However, this can only be done if DC input 3 has been released for this option. The battery storage connection is activated by entering a battery activation code. You can purchase the battery activation code from the KOSTAL Solar online shop.

Please note the following:

- Battery use must be released in the inverter.
- Only battery storage systems (manufacturers) which have been approved by KOSTAL Solar Electric GmbH may be connected to the inverter.

INFO

A list of **approved battery storage systems** is available in the download area for the product on our website at **www.kostal-solar-electric.com**

© 2024 KOSTAL Solar Electric GmbH

6.9.1 Connecting battery communication

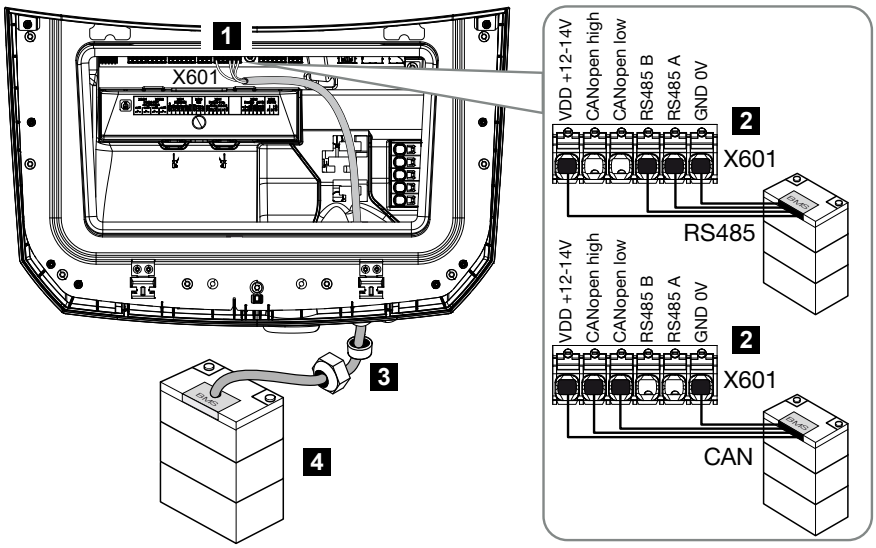

1 Terminal X601

2 Battery storage communication line terminal (depending on battery system)

3 Sealing ring with union nut

4 Battery storage

DANGER

Risk of death due to electrical shock and discharge!

During operation, high voltages are present on the live parts and cables inside the product. Touching live parts or cables will result in death or life-threatening injuries from electrical shock.

- De-energise inverter and battery storage. Please also observe the instructions in the operating manual provided by the battery manufacturer.

INFO

The communication cable is subject to at least the following requirements. Please consult the manual provided by the battery manufacturer for more details.

Wire cross-section 0.2-1.5 mm^2

Outer diameter 5-10 mm

Max. length 30 m

Length of stripped insulation 8 mm

Twisted pair (e.g. Cat. 5e or better)

© 2024 KOSTAL Solar Electric GmbH

1. Switch the DC switch on the inverter to ***OFF***.
2. De-energise the battery storage unit.
3. De-energise the inverter and secure it against being switched back on.
4. Guide the communication cable from the battery storage unit into the inverter.
5. Seal with sealing ring and union nut. Tighten union nut to the prescribed torque. Tightening torque: 8 Nm (M25).
6. Connect the communication cable to the communication interface of the Smart Communication Board.
7. In the battery storage unit, connect the communication cable to the battery management system. To do this, consult the operating manual provided by the battery manufacturer.
8. To prevent communication errors between the battery and the inverter, both devices must be connected via an earth potential.

✓ The communication cable has been connected.

6.9.2 Activation of battery input

If DC input 3 on the inverter has not been activated for battery use, the battery activation code must be entered in the inverter so that it can be activated. There are three ways of doing this.

INFO

Be sure to use a valid activation code. If the details entered are incorrect, the inverter will be blocked after the 5th attempt and can only be enabled again by completely disconnecting the inverter from the AC and DC voltage supply.

Inputting code upon initial commissioning:

1. During initial commissioning, the commissioning wizard asks for the battery activation code under Extra options. In this case, enter the 10-digit activation code for the battery and confirm it.
2. Once this has been acknowledged, DC input 3 can be used to connect a battery storage unit.

✓ Activation is complete.

Inputting code via Webserver:

After initial commissioning, the battery activation code can be entered via the Webserver.

1. Calling up Webserver
2. Go to ***Service menu*** > ***Extra options*** > ***Release new option***.

© 2024 KOSTAL Solar Electric GmbH

3. Enter the 10-digit battery activation code and confirm.
4. The operating mode must then be activated by going to ***Service menu > Operating mode > Change operating mode*** to add the battery to the inverter.

✓ Activation is complete.

Inputting code via inverter menu:

1. After initial commissioning, the battery activation code can be entered in the inverter via the following menu item:
2. ***Settings*** > ***Extra options*** > ***Activate options***
3. Enter the 10-digit battery activation code and confirm.
4. The operating mode must then be activated by going to ***Service menu > Operating mode > Change operating mode*** to add the battery to the inverter.

✓ Activation is complete.

© 2024 KOSTAL Solar Electric GmbH

6.10 Closing the inverter

1. Tighten all cable glands and check that they are properly sealed.
2. Check the fit of connected wires and strands in the inverter.
3. Remove any foreign objects (tools, wire cuttings, etc.) from the inverter.
4. Mount the terminal compartment's cover and let it engage.
5. Fit cover on inverter and screw it tight (1.5Nm).

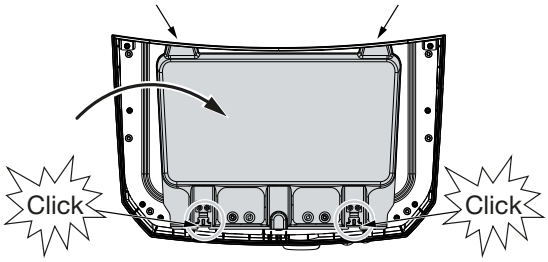

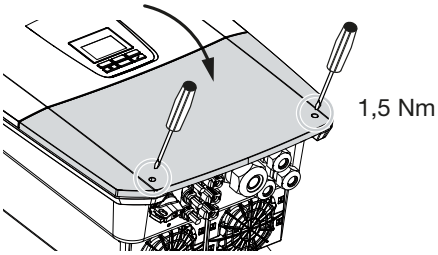

© 2024 KOSTAL Solar Electric GmbH

6.11 Connecting battery's DC cables

The battery’s DC cables may only be connected to the inverter if the inverter and battery storage are voltage-free.

DANGER

Risk of death due to electrical shock and discharge!

The battery’s DC cables may be energised.

- Be sure to de-energise the battery storage system. Please also observe the instructions in the operating manual provided by the battery manufacturer.

INFO

Use flexible and tin-plated cables with double insulation according to EN 50618.

We recommend a cross-section of 6mm^2. Please observe the specifications of the plug manufacturer and the technical data for the inverter.

1. Switch the DC switch on the inverter to ***OFF***.
2. De-energise the battery storage unit.
3. Correctly fit the plug on the positive cable and the socket on the negative cable. The inverter is equipped with plug connectors from PHOENIX CONTACT (type SUNCLIX). During installation, always observe the most recent specifications from the manufacturer (e.g. permissible tightening torque etc.).
   Information on the SUNCLIX installation instructions can be found at:
   www.phoenixcontact.com
4. When mounting the sockets and plugs on the battery's DC cables, ensure their polarity is correct!
5. Plug the sockets and plugs of the battery's DC cables onto the inverter. Retain the plug seals from the plug connectors.

© 2024 KOSTAL Solar Electric GmbH

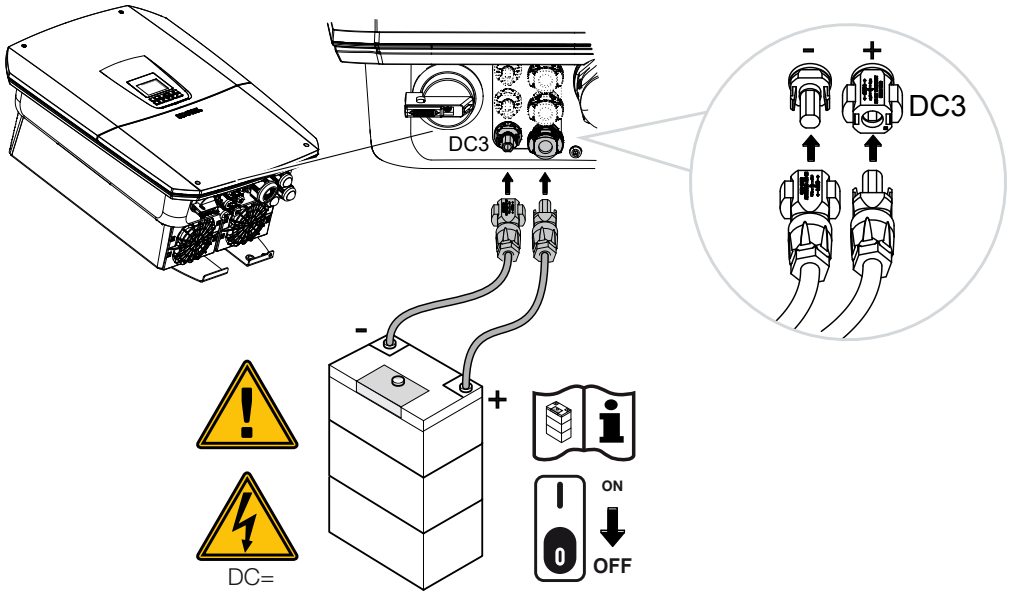

✓ The battery's DC cables are connected.

The battery type and battery capacity are automatically identified during initial installation.

After initial commissioning, the data can be checked in the Webserver by going to ***Service menu > Battery settings*** and other battery configurations can also be carried out.

© 2024 KOSTAL Solar Electric GmbH

6.12 Solar module connection

Solar module connections

WARNING

Risk of fire due to improper installation!

Incorrectly fitted plugs and sockets may heat up and cause a fire.

- During installation, be sure to follow the manufacturer's requirements and manual. Properly mount plugs and sockets.

WARNING

Serious burns due to arcs on the DC side!

DC cables must never be connected to or disconnected from the device during operation, as dangerous arcs may form.

- De-energise DC side, then mount or remove plug connector!

WARNING

Injuries can result from destruction of the device!

When the maximum permitted input voltage/current at the DC inputs is exceeded, this may result in serious damage, which may destroy the device and cause serious injury to anyone present. Even briefly exceeding the voltage can cause damage to the device.

6.12.1 Note the following before connecting the DC plugs

- Set the system up in a voltage range between U_{MPPmin} and U_{MPPmax} to ensure the optimal layout for the solar modules and the highest yield possible. KOSTAL Solar Plan should be used as a planning tool for this.
- Check that the modules are planned and connected correctly.
- Earthing the generator frame is recommended.
- Measure the DC idling voltage. Please ensure that the maximum permitted DC idling voltage is not exceeded.
- Ensure that the plus and minus are not swapped (ensure that there is no polarity reversal) and that the string cables are not interchanged.
- Record all measuring values and make them available if there is a complaint.
- If the power of the solar modules is higher than that specified in the technical data, ensure that the operating point is still within the MPP voltage range of the inverter.

© 2024 KOSTAL Solar Electric GmbH

- Use the same solar module types within a PV string to prevent loss of yield.
- Ensure that the PV string's maximum short-circuit current does not exceed the maximum permitted short-circuit current of the inverter's DC connections.

Failure to comply with this will render any manufacturer's warranty, guarantee or liability null and void unless it can be proven that the damage was not due to non-compliance.

© 2024 KOSTAL Solar Electric GmbH

6.12.2 Connecting solar modules

Only solar modules of the following category may be connected: Class A as specified in IEC 61730.

The PV generators may only be connected to the inverter when this is voltage-free.

DANGER

Risk of death due to electrical shock and discharge!

The PV generators/cables may be live as soon as they are exposed to light.

DANGER

Risk of death due to electrical shock and discharge!

- De-energise device and secure against being switched on again.

INFO

Damage possible

If the PV generators are incorrectly connected (including cross-connection on the inverter itself), the inverter may be damaged. Check the connections before commissioning.

INFO

The solar module types used and the orientation should be the same within a PV string.

INFO

Use flexible and tin-plated cables with double insulation according to EN 50618.

We recommend a cross-section of 6mm^2. Please observe the specifications of the plug manufacturer and the technical data for the inverter.

1. Switch the DC switch on the inverter to ***OFF***.
2. De-energise the inverter and secure it against being switched back on.
3. If there is more than one inverter in a PV system, ensure that no cross-connection occurs when the PV generators are connected.

© 2024 KOSTAL Solar Electric GmbH

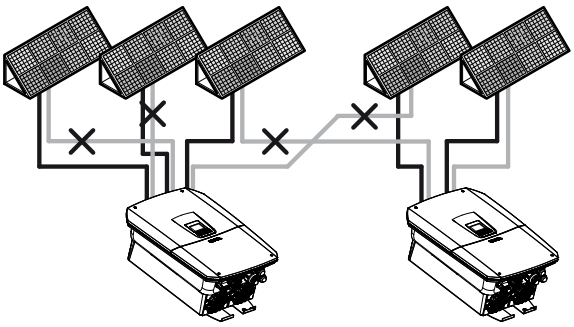

4. Check the strings for earth faults and short circuits and rectify these where appropriate.
5. Correctly fit the plug on the positive cable and the socket on the negative cable. The inverter is equipped with plug connectors from PHOENIX CONTACT (type SUNCLIX). During installation, always observe the most recent specifications from the manufacturer (e.g. use of special tools, permissible tightening torques etc.).
   Information on the SUNCLIX installation instructions can be found at:
   www.phoenixcontact.com
6. When mounting the sockets and plugs on the DC cables used by the solar modules, ensure their polarity is correct! The poles of the PV strings (PV field) must not be earthed.
7. Plug the sockets and plugs of the DC cables onto the inverter. Retain the plug seals from the plug connectors.

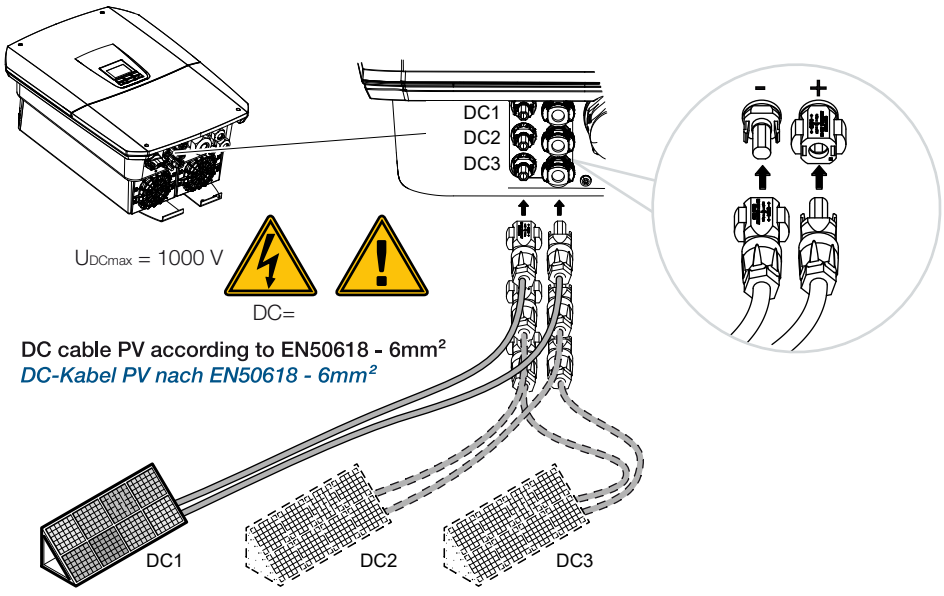

✓ The DC side is connected.

© 2024 KOSTAL Solar Electric GmbH

7. Initial commissioning

7.1 Initial commissioning 106
7.1.1 Initial commissioning via display 108
7.1.2 Initial commissioning via web browser 112
7.1.3 Initial commissioning via the KOSTAL Solar App's setup wizard 115
7.2 Configuring settings in the Webserver 119
7.3 Handover to the operator 120

© 2024 KOSTAL Solar Electric GmbH

7.1 Initial commissioning

Initial commissioning can be performed via the display, the inverter's Webserver or via the ***Setup wizard*** in the **KOSTAL Solar App**.

The required activation codes are requested during initial commissioning or are requested beforehand via the Solar Config planning tool, accessed via the KOSTAL Terminal.

The activation codes should be purchased from the KOSTAL Solar Webshop before commissioning.

INFO

The installation process may vary depending on the software version of the inverter.

Switch on the inverter

There must be at least ***min. input voltage (UDCmin)*** for initial commissioning. The output must also be able to cover the inverter's self-consumption during initial commissioning.

1. Activate supply voltage via the line circuit breaker.
2. Switch on the battery system, if present, using the battery switch.

INFO

For more information about operation, refer to the operating manual for the battery system.

➔ The battery system starts up.

3. Move the DC switch on the inverter to the ON position.
4. If external DC voltage separators are present, activate the DC strings consecutively.

➔ The installation wizard is shown on the display.

© 2024 KOSTAL Solar Electric GmbH

Initial commissioning via the inverter display

The inverter display is used to carry out initial commissioning. Here, the data is entered on the inverter.

Initial commissioning via display, Page 108

Initial commissioning via the inverter Webserver

The inverter's integrated Webserver is used to carry out initial commissioning. An additional device, e.g. a PC or smartphone that accesses the Webserver, is required to enter the data.

To do this, the user must first select and set up the network connection via the inverter display before a connection is made via the input device.

The potential connection methods are:

- **Wifi access point**: After switching on the inverter, it provides a Wifi access point. A connection to the inverter's Wifi access point can be established using a smartphone. The access data for this is shown as a QR code on the inverter's display.
- **LAN**: The inverter is connected to the local network via a LAN connection. The Webserver can then be accessed via a LAN-enabled device.

After selecting the connection method, the inverter's website is accessed and initial commissioning can be carried out.

Initial commissioning via web browser, Page 112

Initial commissioning via setup wizard in the KOSTAL Solar App

A smartphone is required to input the data.

Initial commissioning is performed via the ***setup wizard*** in the **KOSTAL Solar App**.

The application is only available to installers. For this purpose, Pro mode must be activated in the **KOSTAL Solar App**.

Initial commissioning via the KOSTAL Solar App's setup wizard, Page 115

© 2024 KOSTAL Solar Electric GmbH

7.1.1 Initial commissioning via display

The inverter display is used to carry out initial commissioning. Here, the data is entered on the inverter.

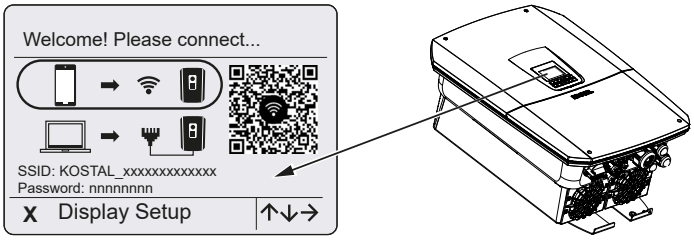

1. Press ***X*** on the inverter to start the installation via the display.

➔ The ***Language*** menu is displayed.

2. Select the language using the arrow keys and confirm with ***ENTER***.
3. Press the right arrow key to go to the next installation item.

➔ The ***System components*** menu is displayed.

4. Under operating mode, select which components should be taken into consideration during the initial setup (PV generators, installed energy meter, connected battery, a KOSTAL BackUp Switch or an automatic backup box).
   Select the items using the arrow keys and confirm with ***ENTER***.
   The items are then taken into consideration during the initial installation.
5. After you have selected the items with the arrow keys, go to ***Confirm*** and confirm with ***ENTER***.
6. Press the right arrow key to go to the next installation item.

INFO

Depending on the ***system components*** selected, some menu items may appear or disappear.

➔ The ***Date and time*** menu is displayed.

7. Select the time zone and set the date/time, or have them set automatically, and confirm with ***ENTER***.

INFO

Entering the date and time ensures that the downloaded log data has the correct time assigned to it.

© 2024 KOSTAL Solar Electric GmbH

8. Press the right arrow key to go to the next installation item.

➔ The ***Extra options*** menu appears on the display.

INFO

This item can be used to enable options by entering an activation code in the inverter. The activation code, e.g. for connecting a battery to DC input 3 on the inverter, can be purchased from our online shop.

INFO

The extra options currently released are shown under ***Released options***.

9. Select ***Release option*** and confirm with ***ENTER***.
10. Enter the code you previously purchased from the KOSTAL Solar Webshop.
11. At the end, confirm the input with √.
12. Press the right arrow key to go to the next installation item.

➔ The ***Energy management*** menu is displayed.

13. Use the arrow keys to select the relevant menu item and confirm with ***ENTER***.
14. For ***Max. grid feed-in***, enter the value that the energy supply company specified. Do this by pressing ***ENTER*** and using the arrow keys to enter the value. Confirm each digit with ***ENTER***. At the end, confirm the input with √.
15. Use the arrow keys to select the ***Energy meter*** field and press ***ENTER*** . Select the installed energy meter from the list and confirm with ***ENTER***.
16. Press the right arrow key to go to the next installation item.

➔ The ***Solar Portal*** menu appears on the display.

17. Select the corresponding menu item with the arrow keys.
18. Press ***ENTER***, select the solar portal you are using and confirm with ***ENTER***.
19. To activate the transfer, highlight the item and confirm with ***ENTER***.

➔ The transfer is activated.

20. Press the right arrow key to go to the next installation item.

➔ The ***Modbus SunSpec (TCP)*** menu is displayed.

21. If you require the Modbus/SunSpec protocol via TCP, for example for the inverter to be monitored by an external, connected device, you can activate it here.
To activate the Modbus/SunSpec protocol, highlight the item and confirm with ***ENTER***.

© 2024 KOSTAL Solar Electric GmbH

22. Press the right arrow key to go to the next installation item.
➔ The ***Updates*** menu appears on the display.
23. Select the update method for installing future software updates on the inverter and confirm with ***ENTER***.

INFO

You can choose between the system update methods ***Manual updates, Notify about available updates*** and ***Automatic updates*** . The ***Automatic updates*** method is recommended.

For the system update methods ***Find out about updates*** and ***Automatic updates***, the inverter must be connected to the Internet.

24. Press the right arrow key to go to the next installation item.
➔ The ***Country/guideline*** menu appears on the display.
25. Select the country or the guideline used and confirm with ***ENTER***.
26. Press the right arrow key to go to the next installation item.
➔ ***Apply settings*** appears on the display.
27. Press ***ENTER*** to adopt the entries.

INFO

If an incorrect country setting has been selected, it can be reassigned using the inverter's menu item ***Reset national guideline***.

28. The settings are applied by the inverter.
✓ The inverter restarts after the installation, if necessary. Initial commissioning is completed.

The inverter is in operation and can now be used.

INFO

If there is a software update available for the inverter, install this first.

You can find the latest software update in the download area for the product on our website at **www.kostal-solar-electric.com**

© 2024 KOSTAL Solar Electric GmbH

INFO

In France, the installer is personally responsible for obtaining any obligatory additional, required labels for the inverter and feed cables and for attaching them to the inverter and feed cables.

© 2024 KOSTAL Solar Electric GmbH

7.1.2 Initial commissioning via web browser

Initial commissioning via the web browser can be carried out using the inverter's Wifi access point or a LAN connection.

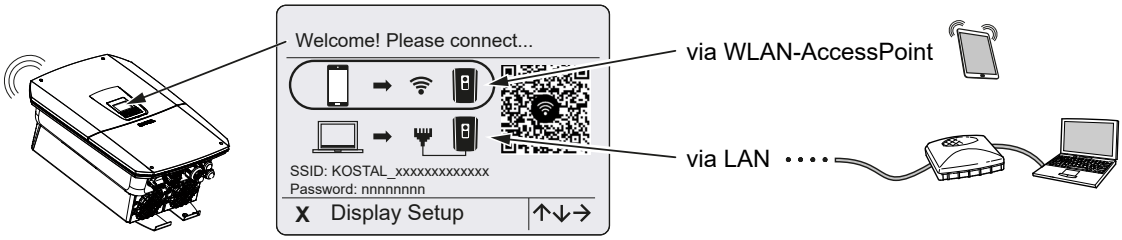

Select a connection for initial commissioning:

Selection: Wifi access point

The inverter's Wifi access point is used for the setup.

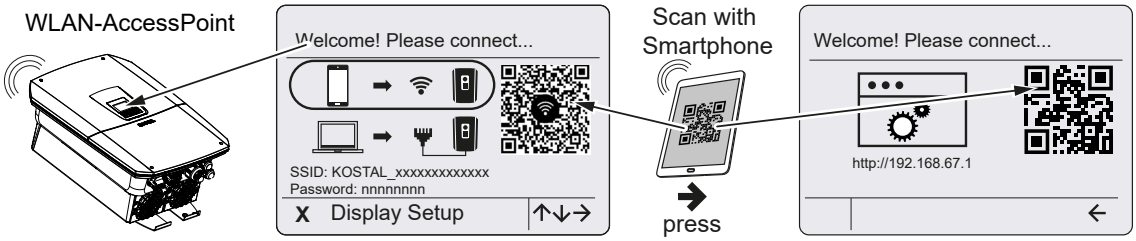

1. Choose to connect via the Wifi access point for initial commissioning:
2. Scan the QR code with your smartphone and connect to the inverter's Wifi access point. If this is not possible, you can establish the connection manually. Use the displayed SSID (KOSTAL_<inverter serial number>) and password (P<inverter item number>).
3. Press the right arrow key on the inverter.

➔ The QR code for the Webserver for the initial setup wizard is displayed.

4. Scan the QR code for the Webserver with your smartphone or enter the IP address displayed.

✓ The Webserver connection is established and the initial setup wizard is displayed. Continue with **Setup wizard, Page 114**.

If the Webserver initial setup wizard does not start in the browser, enter the WLAN IP address (192.168.67.1) shown on the inverter display into a web browser on your smartphone.

© 2024 KOSTAL Solar Electric GmbH

INFO

If the settings for the Wifi access point are not changed after initial commissioning (SSID/password), the Wifi access point will be deactivated again after 120 minutes for security reasons. The Wifi access point can be configured in the Webserver under ***Settings > Network > Wifi > Wifi Mode > Access Point***.

Selection: LAN cable

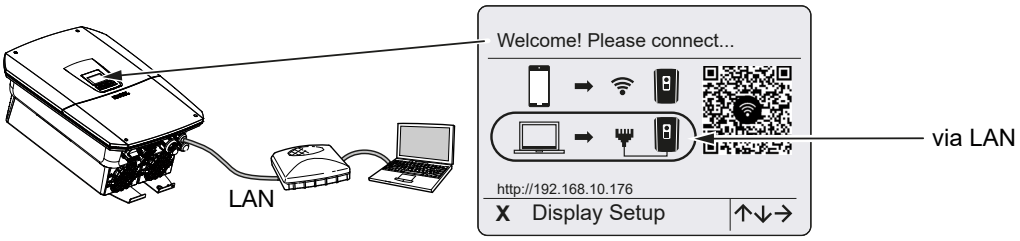

The inverter is connected to a router in the local network via a LAN cable and automatically obtains an IP address via a DHCP server.

1. The inverter's Webserver can now be accessed in a web browser using an input device (e.g. PC). To do this, enter the IP address shown on the inverter display into a web browser on your input device.

✓ The Webserver connection is established and the initial setup wizard is displayed. Continue with **Setup wizard, Page 114**.

© 2024 KOSTAL Solar Electric GmbH

Setup wizard

As soon as the connection has been established, the web page for initial setup of the inverter opens automatically in the connected device's web browser. If this is not the case, please enter the inverter's IP address manually in the browser. The address is shown on the inverter display.

INFO

If a message appears saying that the inverter's WLAN is not connected to the Internet and mobile data should be used instead, remain connected to the inverter's WLAN.

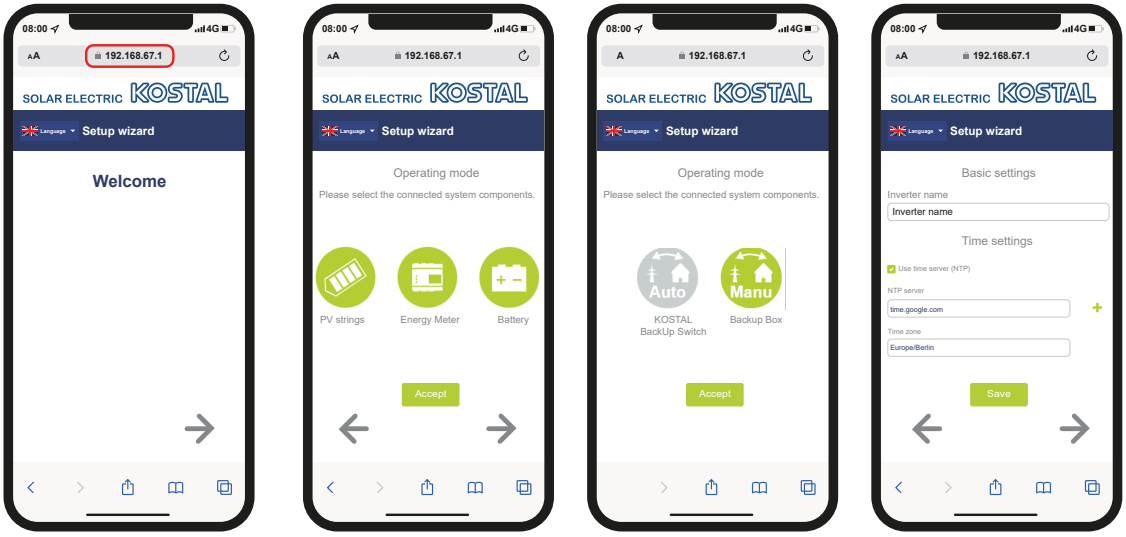

1. Press the right arrow key.
2. If you are not automatically logged in, log in to the inverter as an ***installer*** using the ***master key*** and ***service code***. You will find the ***master key*** on the inverter's type plate.
3. Under operating mode, select which components should be taken into consideration during the initial setup (PV generators, installed energy meter, connected battery, a KOSTAL BackUp Switch or an automatic backup box). The following items are then taken into consideration during the initial installation.
4. Follow the instructions of the initial installation wizard.
5. Save each page using the ***Save*** button.
6. Press the right arrow key to move to the next page.

➔ Setup completed.

© 2024 KOSTAL Solar Electric GmbH

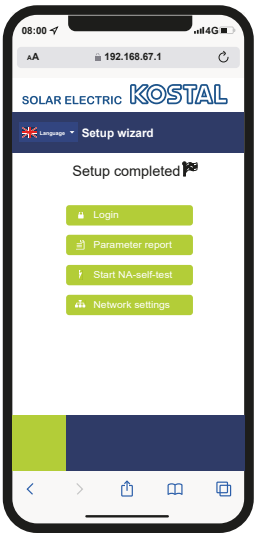

7. Finally, you can change the network settings, download the parameterisation report and, if necessary, start the grid and system protection self-test.

✓ The inverter has been set up and is ready for operation.

7.1.3 Initial commissioning via the KOSTAL Solar App's setup wizard

To perform the installation using the ***setup wizard***, the following requirements must be met.

- The **KOSTAL Solar App** must be installed on the smartphone.
- As an installer, you have set up an account in the **KOSTAL Solar Terminal** and are configured as a ***fitter*** for your company. If you are, you will automatically receive a service code, which is required during initial commissioning. You can view the service code in the **KOSTAL Solar Terminal** by going to ***My profile***.
- The inverter's WLAN access point is used for the setup.

1. Choose connection via WLAN access point on the inverter.

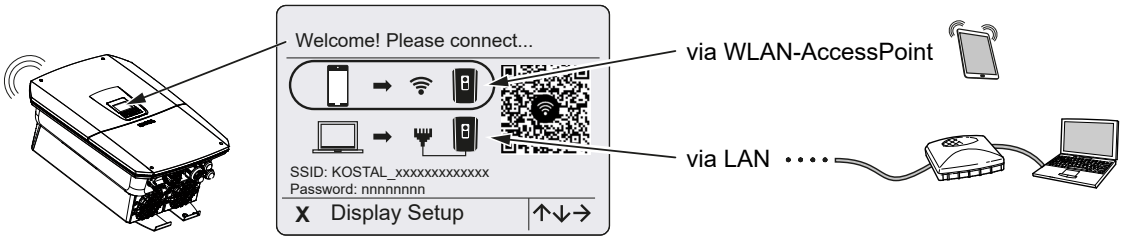

2. Launch the **KOSTAL Solar App.**
3. If you have not yet logged in to the **KOSTAL Solar Terminal**, you will be automatically prompted to log in. When you log in, your data will be automatically stored in the **KOSTAL Solar App**, including the service code, if you have been set up as a fitter.

© 2024 KOSTAL Solar Electric GmbH

4. Switch to the ***Pro version*** within the **KOSTAL Solar App**. To do this, go to the Settings in the top left and activate the ***PRO version***.
5. Switch to the Pro version.

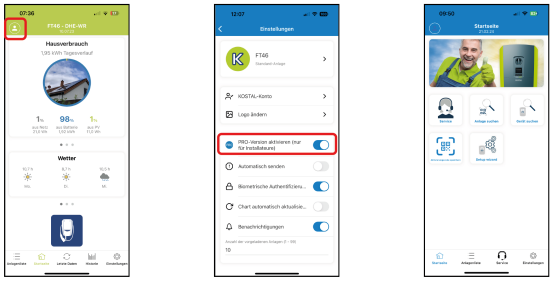

6. Call up the ***setup wizard***. Scan the QR code with your smartphone and connect to the inverter's WLAN access point.



7. Select the inverter for which you want to carry out initial commissioning and then scan the master key from the type plate.



✓ The Webserver connection is established and the initial setup wizard is displayed. Continue with **Setup wizard, Page 114**.

Setup wizard via the KOSTAL Solar App

INFO

If a message appears saying that the inverter's WLAN is not connected to the Internet and mobile data should be used instead, remain connected to the inverter's WLAN.

© 2024 KOSTAL Solar Electric GmbH

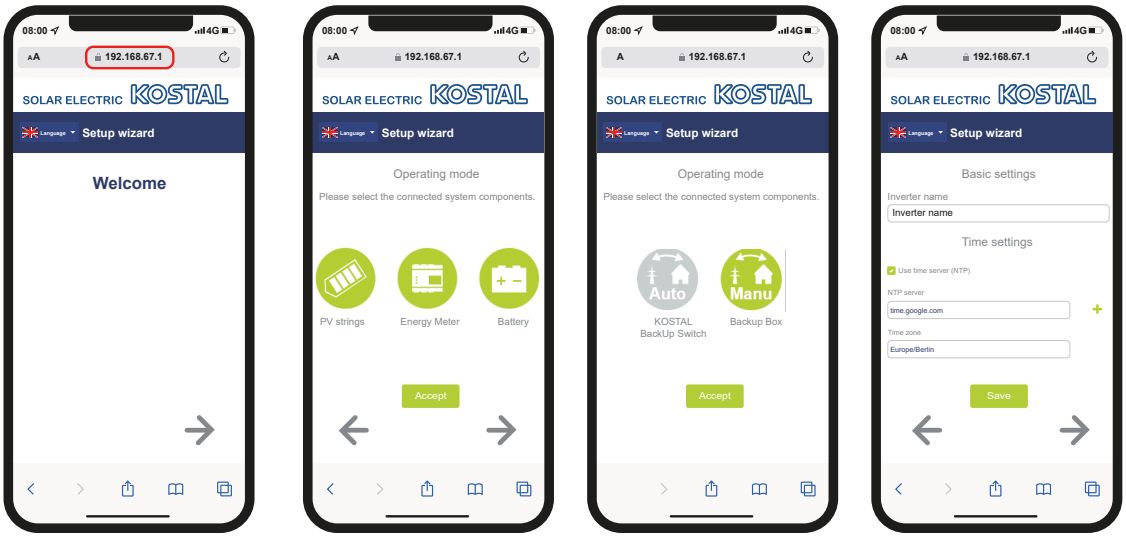

1. Press the right arrow key.
2. If you are not automatically logged in, log in to the inverter as an ***installer*** using the ***master key*** and ***service code***. You will find the ***master key*** on the inverter's type plate.
3. Under operating mode, select which components should be taken into consideration during the initial setup (PV generators, installed energy meter, connected battery, a KOSTAL BackUp Switch or an automatic backup box). The following items are then taken into consideration during the initial installation.

INFO

Activation codes purchased and received in advance via the KOSTAL Solar App are automatically transferred to the inverter and can be used during the initial setup.

4. Follow the instructions of the initial installation wizard.
5. Save each page using the ***Save*** button.
6. Press the right arrow key to move to the next page.

➔ Setup completed.

© 2024 KOSTAL Solar Electric GmbH

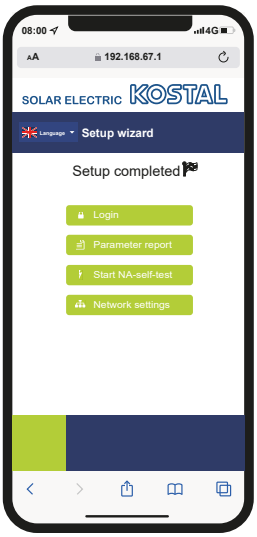

7. Finally, you can change the network settings, download the parameterisation report and, if necessary, start the grid and system protection self-test.

✓ The inverter has been set up and is ready for operation.

© 2024 KOSTAL Solar Electric GmbH

7.2 Configuring settings in the Webserver

After the initial installation, more settings can be made using the inverter's menu or more conveniently via the Webserver.

To do this, use a PC or tablet to log in on the Webserver as an installer. Initial commissioning is completed.

INFO

Grid parameters, limitation parameters and parameters specified by guidelines can only be changed with a service code.

To log in as an installer, you need the master key from the inverter's type plate and your service code, which can be requested from our service team.

Information about our service team can be found on our website at **www.kostal-solar-electric.com** > ***Service and support***.

The following settings should be configured after initial commissioning:

- Get the installer to configure inverter settings.
- Get the energy supply company to configure the mandatory settings for grid feed-in.
- Log in to the KOSTAL Solar Portal, if not already done.
- Allocate a password for the plant owner.
- Update the inverter software. **Updating software, Page 254**
- If a battery is connected, configure the battery settings (e.g. ***min. state of charge (SoC)*** in ***Service menu > Battery settings***.
- If the battery is going to be controlled externally by an energy supply company, configure the battery control. **External battery control, Page 225**
- Configure the ripple control receiver, if connected. **Active power control, Page 215**
- If connected, configure the message contact for external overvoltage protection (surge protection device (SPD)).
- Configure the switched outputs (e.g. for a heat pump), if connected and being used. **Switched outputs, Page 202**.
- Configure other settings.

© 2024 KOSTAL Solar Electric GmbH

7.3 Handover to the operator

Following successful installation and commissioning, all documents are to be handed over to the operator.

Instruct the operator in how to use the PV system and the inverter.

The operator must be made aware of the following points:

- Position and function of the DC switch
- Position and function of the AC line circuit breaker
- Procedure for disconnecting the device
- Safety when handling the device
- Appropriate procedure when checking and servicing the device
- Meaning of the LEDs and the display messages
- Contact person in the event of a fault
- The provision of system and inspection documentation in accordance with DIN EN 62446 (VDE 0126-23) (optional).

As the **installer and commissioning engineer**, have the operator confirm the proper handover with their signature.

As the **operator**, have the installer and commissioning engineer confirm that the installation of the inverter and the PV system is safe and complies with standards with their signature.

© 2024 KOSTAL Solar Electric GmbH

8. Inverter operation

8.1 Control panel 122
8.1.1 Operation of the display 123
8.1.2 Entry of text and numbers 123
8.2 Operational status (display) 125
8.3 Operational status (LEDs) 128

© 2024 KOSTAL Solar Electric GmbH

8.1 Control panel

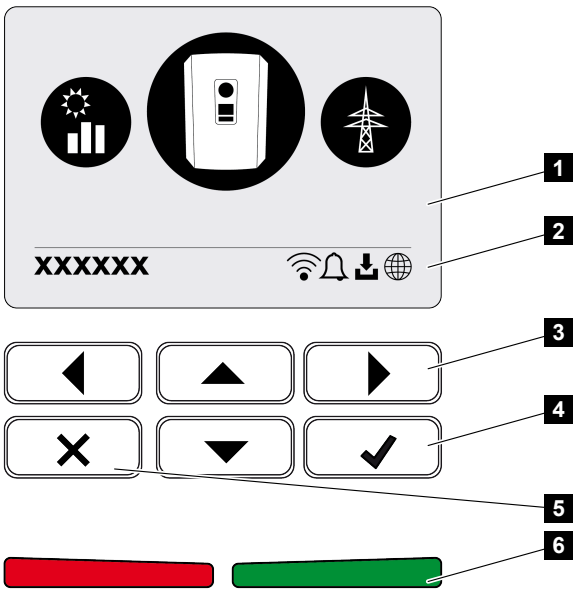

1 Display
2 Status display
3 Arrow key for navigating in the menus
4 ENTER key to confirm
5 DELETE key (for clearing or for exiting the menu)
6 Status LEDs: fault (red), warning (flashing red), feed-in (green), feed-in limited (green flashing)

The inverter indicates the relevant operational status using two LEDs and the display.

INFO

When no key has been pressed for several minutes, the screensaver with the image of the inverter appears automatically on the display.

The operating values can be retrieved and settings adjusted on the display.

© 2024 KOSTAL Solar Electric GmbH

8.1.1 Operation of the display

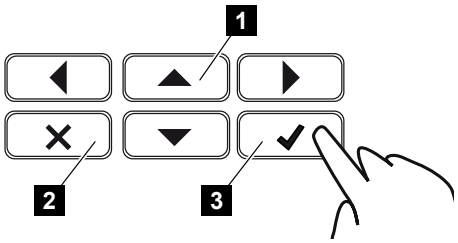

1 UP/DOWN/LEFT/RIGHT: Characters, buttons, functions and input fields are selected with the arrow keys.

2 DELETE/Cancel: Pressing DELETE deletes the selection, the entry or a value, cancels an entry or jumps to the menu above after confirming the entry.

3 ENTER/Confirm: Pressing the ENTER key activates the selected menu element or confirms the input. If you press ENTER in the input box, the value is saved.

8.1.2 Entry of text and numbers

The display can be used to enter texts and numbers (e.g. inverter name). When input is required, a keypad of letters and numbers appears under the input box in order to do this.

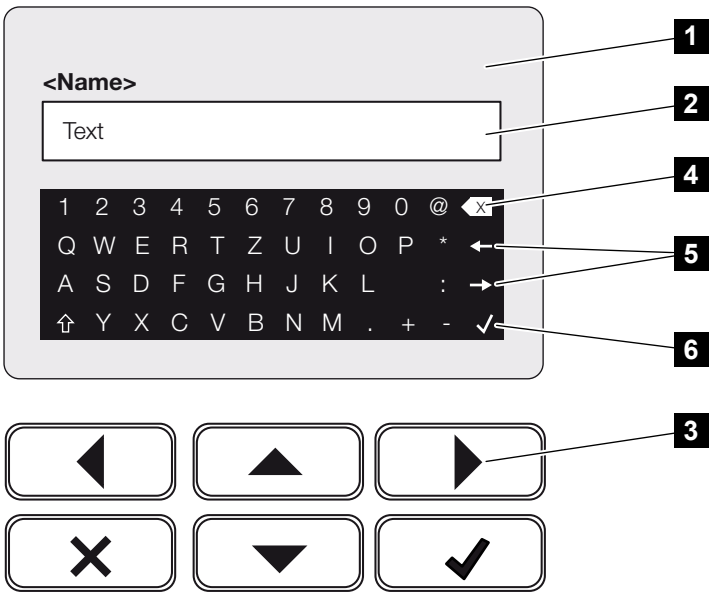

1 Inverter display

2 Input box

3 Arrow keys: Select the digits (confirm with ENTER or exit the menu by pressing X)

4 Backspace key: Delete individual digits on the left of the cursor

5 Arrow keys: Move the cursor within the text

6 ENTER key: Save entry and close menu

© 2024 KOSTAL Solar Electric GmbH

© 2024 KOSTAL Solar Electric GmbH

8.2 Operational status (display)

The inverter's operational statuses are shown on the inverter's display:

INFO

The user interface/menu items in the inverter depend on the software installed in the inverter and may differ from the description here.

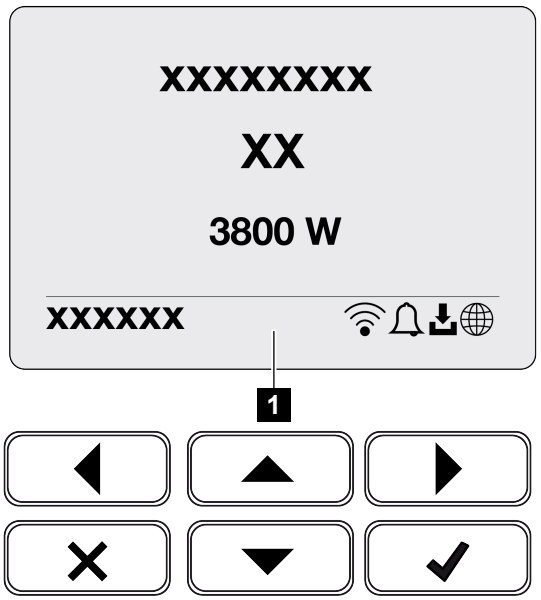

1 Display area, information and inverter status displayed

The following table explains the operational notifications that can appear on the display:

Symbol	Display	Explanation
---	Off	Input voltage on the DC side (photovoltaic modules) is too low or inverter switched off.
	Bell symbol	An event is present. Remedial measures can be found in the chapter Event codes. The event can be queried in the inverter menu by going to ***Service*** > ***Event list*** or can be viewed using the Down arrow key.
	Software update symbol	There is a software update available for the inverter. The software update process can be started in the inverter menu under ***Service*** > ***Updates*** or via the inverter.

© 2024 KOSTAL Solar Electric GmbH

Symbol	Display	Explanation
	Globe symbol	Shows a successful connection to the solar portal.
	Wifi icon	Displays the Wifi connection status.

Display	Explanation
IP address	Inverter IP address
Insulation measurement	Device performs an internal check
Grid check	Device performs an internal check
Starting	Internal control measurements according to VDE 0126
Starting, including check of DC generators	Device performs an internal check
Feed in	Measurement successful, MPP control active (MPP = maximum power point)
Feed-in ext. regulated	The feed-in is limited due to a fault (e.g. PV energy is restricted, **Active power control, Page 215**, too high temperature, fault)
Shutdown by ext. signal	The feed-in is shut down as a result of an external signal from the energy supply company.
Event xxxx, yyyy	An event is present. Up to two active events can be displayed. Remedial measures can be found in the chapter Event codes.
Waiting time ...	The device is not feeding into the public grid due to an event. Grid synchronisation: The inverter synchronizes itself with the public grid and feeds in. Grid check: A grid check is carried out. Grid error: There is an error in the public grid. As soon as this is rectified, the inverter feeds in again. Overheating: The inverter's temperature is too high. As soon as this has fallen, the inverter feeds in again.
DC voltage too low	Electronics are ready for operation, DC voltage is still too low for feed-in.

© 2024 KOSTAL Solar Electric GmbH

Display	Explanation
Impermissible DC voltage	DC voltage still too high.
Ext. battery control active (only with battery connected)	The battery is controlled by an external management system. Ch. 8.1
Deep discharge protection (only with battery connected)	The battery which is connected to the inverter is charged from the public grid using an equalisation charge.
Equalisation charge (only with battery connected)	The battery which is connected to the inverter is charged from the public grid using an equalisation charge. It can only be activated with installer access via the service menu.
Service charging (only with battery connected)	The battery which is connected to the inverter is charged from the public grid using an equalisation charge. It must be activated via the service menu. It can only be activated with installer access via the service menu.
Battery sleep mode (only with battery connected)	If the battery charging status falls below the min. SoC (e.g. 5% for BYD batteries), the ***battery sleep mode*** status is displayed and the battery is disconnected from the system. Sleep mode is exited as soon as the battery can be charged with excess power. If the SoC of the battery falls below the minimum allowed SoC, the battery receives a trickle charge of x% of the total battery capacity from the grid to protect the battery. Trickle charge: 5% trickle charge the first time the SoC falls below the permitted value. 10% trickle charge the second time the SoC falls below the permitted value. 15% trickle charge the third time the SoC falls below the permitted value. Once sleep mode has been exited, the next trickle charge starts again with +5 %.

© 2024 KOSTAL Solar Electric GmbH

8.3 Operational status (LEDs)

The LEDs indicate the current operational status of the inverter.

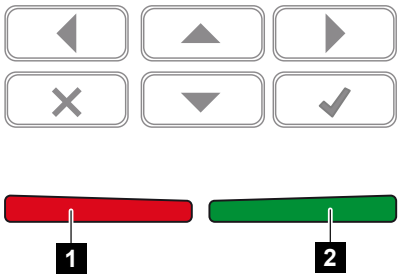

1 Red LED: Warning/fault

2 Green LED: Feed-in

LED	Description
Red LED off	There are no faults present.
Red LED flashing	There is an event (warning) active.
Red LED lit up	A fault has occurred. Remedial measures can be found in the chapter Event codes.
Green LED off	Inverter not feeding in.
Green LED flashing	Inverter feeding in with limitation.
Green LED lit up	Inverter in feed-in mode.

© 2024 KOSTAL Solar Electric GmbH

9. User interface and menus

9.1 Inverter menu structure 130
9.1.1 Power flow diagram 131
9.1.2 Overview of inverter menus 132
9.2 Inverter menus 134
9.2.1 Menu – Settings/information 134
9.2.2 Menu – AC side (grid) 141
9.2.3 Menu – House consumption 142
9.2.4 Menu – PV generator (DC side) 144
9.2.5 Menu – Battery 145
9.3 The inverter Webserver 146
9.3.1 Calling up Webserver 146
9.3.2 Start screen 148
9.3.3 Home menu 150
9.3.4 Current values menu 151
9.3.5 Statistics menu 154
9.3.6 Log data menu 155
9.3.7 Settings menu 156
9.3.8 Menu - Service menu - General 169
9.3.9 Menu - Service menu - Grid parameters 181
9.3.10 Update menu 186
9.3.11 Info menu 187

© 2024 KOSTAL Solar Electric GmbH

9.1 Inverter menu structure

The screensaver is displayed after start-up or if no key has been pressed for a long time.

Pressing any key activates the background lighting. The screensaver is exited by again pressing any key.

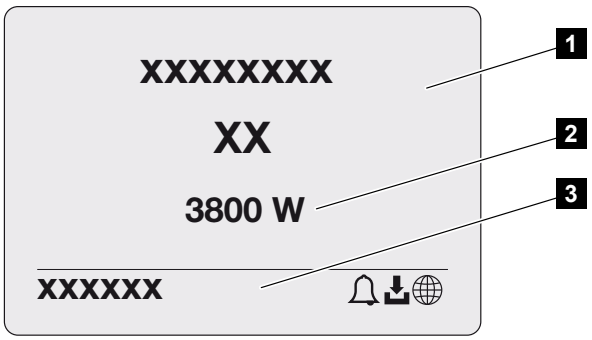

1 Inverter type with power class
2 Current AC power
3 Status line

The information displayed on the status line changes every 5 seconds with the following content:

- IP address (if configured)
- Wifi status (if active)
- Inverter status
- Event code (if available)
- Solar portal connection active (if configured)

© 2024 KOSTAL Solar Electric GmbH

9.1.1 Power flow diagram

When the screensaver is being displayed, the power flow diagram can be displayed by pressing another key. The diagram is a very clear representation of the current power flow in the house grid and includes the relevant power values. The arrows indicate the direction in which power is flowing at present.

By pressing the OK key, you exit the power flow diagram and switch to the inverter menu level.

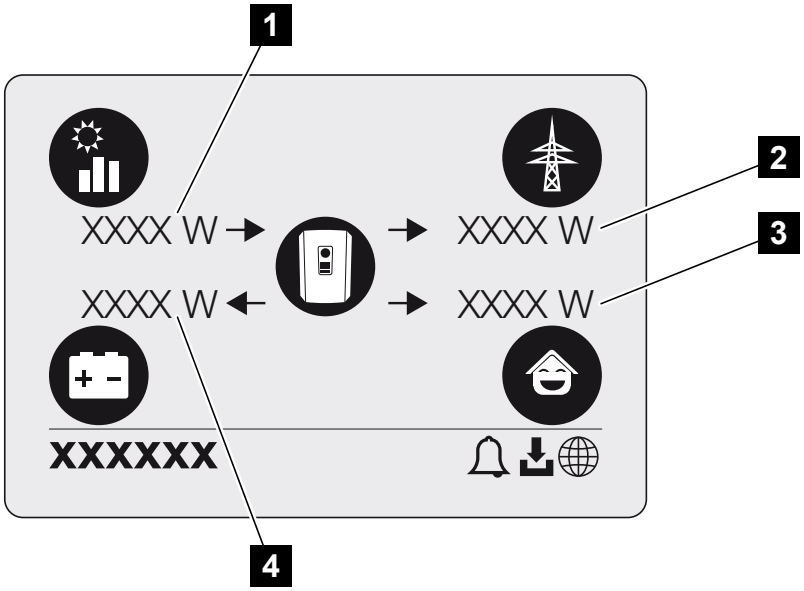

1 Indication of power being generated by the PV modules.

2 Indication of power, which is being fed into or drawn from the public grid.

3 Indication of power being consumed in the house.

4 Indication of power with which the battery is being charged or discharged.

INFO

In order for the home consumption to be displayed, a compatible energy meter must be installed in the house network.

INFO

The battery must be activated and connected before it can be displayed.

© 2024 KOSTAL Solar Electric GmbH

9.1.2 Overview of inverter menus

INFO

The user interface/menu items in the inverter depend on the software installed in the inverter and may differ from the description here.

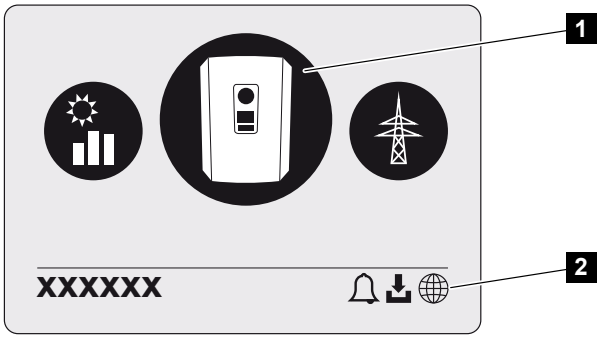

1 Active menu

2 Status line

The inverter provides the following menu items for querying statuses and configuring the inverter:

Symbol	Function
	Inverter settings
	Status query and information about the grid feed-in (AC side)
	House consumption status query
	Status query for the battery charging and discharging power

© 2024 KOSTAL Solar Electric GmbH

Symbol	Function
	PV generators status query (DC side)

© 2024 KOSTAL Solar Electric GmbH

9.2 Inverter menus

9.2.1 Menu – Settings/information

The inverter and additional components (e.g. energy meter) are configured under "Settings/information".

Basic setting

Setting the general parameters.

Parameter	Explanation
Language	Selection of menu language
Inverter name	Enter the inverter name. The characters a–z, A–Z, 0–9 and "-" can be used when changing the name. Spaces or special characters are not possible. The browser connection to the Webserver can be established with the new name following the name change. It is still possible to gain access with the serial number.
Date and time	Enter the time and date. Setting the time zone Activate/deactivate or automatic determination of time. The NTP server can be configured via the Webserver.

Communication

Set the communication parameters for the inverter's Ethernet connection.

INFO

The "Automatic" option is activated by default. This means that the inverter acquires its IP address from a DHCP server or automatically generates an IP address.

If the inverter is not allocated an automatic IP address through a DHCP server, the inverter can be configured using the item ***Manual***.

The data necessary for configuration, such as IP addresses, router addresses etc., can be found on your router/gateway.

© 2024 KOSTAL Solar Electric GmbH

Parameter	Explanation
Network IPv4	Activate the network protocol and configure the network interface (Ethernet) for the inverter. The ***Automatic*** option is activated by default. If configuring manually, the corresponding parameter values should be entered.
	Setting the DNS server: The ***Automatic*** option is activated by default. If configuring manually, the corresponding parameter values should be entered.
WLAN settings	Setting the communication parameters for the inverter's WLAN connection. The inverter offers various options here.
	Wifi mode: Wifi off The inverter's Wifi interface is deactivated.
	Wifi mode: Access point The inverter offers a Wifi access point. This can be used, for example, to log a PC or smartphone on to the inverter to configure or monitor the inverter. ***SSID***: Displays the inverter's SSID. The SSID consists of ***KOSTAL_*** and the inverter's serial number, e.g. ***KOSTAL_91109ADE00053***. ***SSID visible***: The SSID is visible to other devices in the Wifi search. ***Encryption***: Select Wifi encryption. ***Password***: Enter a password. By default, this is the article number found on the type plate. ***Radio channel***: Select the radio channel. By default, this should be set to "Auto". ***QR code***: Displays the data as a QR code. Scan the code with a smartphone and connect to the inverter.

© 2024 KOSTAL Solar Electric GmbH

Parameter	Explanation
	Wifi mode: Client The inverter is a Wifi client and can connect to a Wifi gateway in the local home network. In that case, a LAN connection no longer needs to be set up. ***Find networks***: Press the button to search for available networks in the vicinity of the inverter. The available networks in the vicinity of the inverter are then displayed. Select your local network to which the inverter should connect. ***SSID***: If the network you are looking for is not displayed, this may be because the network has been configured to not be visible. If this is the case, you can enter the network name yourself.
WLAN IPv4	Configuration of the inverter's Wifi network interface. The Webserver on the inverter can be accessed via this IP address if there is a Wifi connection to the inverter. The ***Automatic*** option is activated by default. If configuring manually, the corresponding parameter values should be entered.
	Setting the DNS server: The ***Automatic*** option is activated by default. If configuring manually, the corresponding parameter values should be entered.
Modbus SunSpec (TCP)	Activate the Modbus SunSpec (TCP) protocol
EEBus configuration	Activate EEBus protocol

Solar portal

Input for the solar portal configuration. If a solar portal is to be used, the log data and events are sent to the solar portal.

Parameter	Explanation
Solar portal	Selection of solar portal.
Activate	Activate to start sending to a solar portal.

© 2024 KOSTAL Solar Electric GmbH

Device information

Shows information about the versions installed on the inverter.

Parameter	Explanation
Article number	Article number of the inverter
Serial number	Inverter serial number
Nominal apparent power	Maximum nominal apparent power of the inverter
Hardware	Hardware version
MC	Main controller version
IOC	Input-output controller version
SW	Software version
National guideline	Country guidelines selected for the inverter
Max. grid feed-in	The configured maximum power that can be fed into the public grid
Insulation resistance	Measured insulation resistance value
Energy in grid mode	Indicates in kWh the amount fed into the house grid in grid mode.
Run time in grid mode	Number of hours in grid mode
Energy in backup mode	Indicates in kWh the amount fed into the house grid in backup mode.
Run time in backup mode	Number of hours in backup mode. Observe the maximum operating hours in backup mode. After **5000 hours** in backup mode, the warranty expires because the components in the inverter are under significantly more load in microgrid operation than in grid mode.

Extra options

This function can be used to release additional options/functions for the inverter.

Parameter	Explanation
Release option	Enter an activation code, e.g. to connect a battery. This must be purchased in advance from the KOSTAL Solar Webshop.
Released options	Overview of options currently released in the inverter

© 2024 KOSTAL Solar Electric GmbH

INFO

The activation code can be purchased from the KOSTAL Solar Webshop.

You can access the shop via the KOSTAL Solar Terminal or by using this link: shop.kostal-solar-electric.com

Service menu

The installer or an experienced user can use the inverter's service menu to implement settings on the inverter.

INFO

The service menu items depend on the inverter software installed and may differ from the description here.

Some menu items can also be run without a service password. However, these items should only be run by experienced users because otherwise under certain circumstances the inverter may no longer function perfectly.

For the complete service menu to be displayed, the installer must request a code from the inverter manufacturer's service team.

The code is entered by going to the ***Service code input*** menu item.

Once the service code has been entered and confirmed, additional service menu entries appear.

Parameter	Explanation
Service code entries	Service code entered by an installer, and additional menu items released. Installers can obtain the service code from our service team.
Fan test	Start fan test
Reset settings	Reset inverter to factory settings. This resets the following settings: Language, inverter name, date/time, network settings, protocol, log data and solar portal.
Event list	Shows the last 10 events with date. Selecting an event and pressing the "OK" key displays a detailed view of the event.
Device restart	Restart the inverter.

Additional menu items after entering the service code

© 2024 KOSTAL Solar Electric GmbH

Parameter	Explanation
Energy management	■ **Maximum grid feed-in** Set the maximum feed-in capacity. Requirements relating to this are generally specified by the energy supply company (e.g. a limitation to 70%). The inverter's max. power serves as the default. **NOTE! Incorrect settings due to lack of expertise. The system operator is responsible for correctly setting the active power limitation. Your grid operator will provide details of the permissible active power for your system. We recommend that the installer configures all the settings.** ■ **Energy meter** Select the energy meter fitted in the building services. ■ **Sensor position** Select the position of the energy meter in the building services (grid connection or house consumption).
Reset national guidelines	Reset the country setting. After resetting, the inverter starts the commissioning wizard after a restart. **NOTE! Should the inverter not restart automatically, switch it off using the DC switch and also the AC line circuit breaker. Wait 10 seconds and then restart in reverse order.**
Change operating mode	Displays the selected system components. If ***Change operating mode*** is selected, the commissioning wizard restarts. New system components can then be added, e.g. a battery or backup unit.

Update menu

The update menu can be used to set the software update method or to install updates manually.

INFO

You can find the latest update in the download area for the product on our website at **www.kostal-solar-electric.com**

© 2024 KOSTAL Solar Electric GmbH

Parameter	Explanation
System update	Select the inverter's system update method (software update). ■ **Manual updates** The update must be carried out manually. ■ **Find out about updates** The inverter checks at regular intervals whether new software is available. A software update symbol appears on the inverter or in the Webserver if there is an update. The installation must then be started manually. ■ **Automatic updates** The inverter checks at regular intervals whether new software is available and then installs it automatically. This setting is recommended.
Look for updates	The system looks for current updates from the manufacturer. If a new update is available, it is displayed and can then be installed.

© 2024 KOSTAL Solar Electric GmbH

9.2.2 Menu – AC side (grid)

Shows the current values of the AC side.

Current AC power

Shows the current performance data of the grid side (AC) and how this is distributed to the phases.

Parameter	Explanation
Phase 1	Voltage, current and power fed into the public grid or taken from the public grid
Phase 2	
Phase 3	

Yield overview

Indicates the energy generated by the PV generators.

Parameter	Explanation
Day	Yield values for the current day (midnight to midnight)
Month	Yield values for the current month (Day 1 to Day 31)
Year	Yield values for the current year (1 Jan to 31 Dec).
Total	Total yield since commissioning

Grid parameter

Shows the inverter's current grid parameters.

Parameter	Explanation
Current grid frequency [Hz]	Grid frequency
Current cos phi	Current power factor (cos phi)
Current power	Power fed into the house grid by the inverter
Limitation on [W]	Current power curtailment setting

© 2024 KOSTAL Solar Electric GmbH

9.2.3 Menu – House consumption

Shows the home consumption and from which sources the home consumption is being covered (PV generator, battery or public grid).

INFO

In order for the home consumption to be displayed, a compatible energy meter must be installed in the house network.

INFO

A list of **approved energy meters** and their purpose is available in the download area for the product on our website at **www.kostal-solar-electric.com**

Current home consumption

Parameter	Explanation
Consumption	Current home consump.
From PV	Share of home consumption being covered by PV
From grid	Share of home consumption being covered by the public grid
From battery	Share of home consumption being covered by the battery

Daily house consumption

Parameter	Explanation
Consumption	Home consumption of current day
From PV	Share of home consumption that has been covered by PV
From grid	Share of home consumption that has been covered by the public grid
From battery	Share of home consumption that has been covered by the battery

© 2024 KOSTAL Solar Electric GmbH

Monthly house consumption

Parameter	Explanation
Consumption	Home consumption of current month
From PV	Share of home consumption that has been covered by PV
From grid	Share of home consumption that has been covered by the public grid
From battery	Share of home consumption that has been covered by the battery

Degree of self-sufficiency

The degree of self-sufficiency indicates what percentage of the house's total power requirement is covered by self-generated PV energy. The higher the value, the less energy has had to be purchased from the energy supplier.

Parameter	Explanation
Day	Display for current day (from midnight to midnight)
Month	Display for current month (Day 1 to Day 31)
Year	Display for current year (1 Jan to 31 Dec)
Total	Display for since initial commissioning

Self-consumption rate

The self-consumption rate shows the relationship between self-consumption and the total energy generated using the PV generators.

Parameter	Explanation
Day	Display for current day (from 00 to 24 hours)
Month	Display for current month (from day 1 to day 31)
Year	Display for current year (from 1 Jan. to 31 Dec.)
Total	Display for since initial commissioning

© 2024 KOSTAL Solar Electric GmbH

9.2.4 Menu – PV generator (DC side)

Shows the current values of the PV generators.

Current DC power

Shows the generated voltage, current and energy of the PV generators per DC input.

Parameter	Explanation
DC1	Shows the generated voltage, current and power of the PV generators for DC input 1
DC2	Shows the generated voltage, current and power of the PV generators for DC input 2
DC3	Shows the generated voltage, current and power of the PV generators for DC input 3 The values are only displayed if the inverter has a DC input 3 and if this has been configured as a PV input. If there is a battery connected to DC input 3, this is not shown.

© 2024 KOSTAL Solar Electric GmbH

9.2.5 Menu – Battery

Displays the current battery values.

Battery status

If a battery is connected to the inverter, the current battery values are displayed here.

Parameter	Explanation
Charging status	Shows the battery's charging status (only when battery is connected).
Voltage	Shows the battery's voltage.
Charge / discharge current	A charging shows that the battery is being charged. A discharge shows that the battery is being discharged.
Number of cycles	Shows the battery's charging cycles.

© 2024 KOSTAL Solar Electric GmbH

9.3 The inverter Webserver

9.3.1 Calling up Webserver

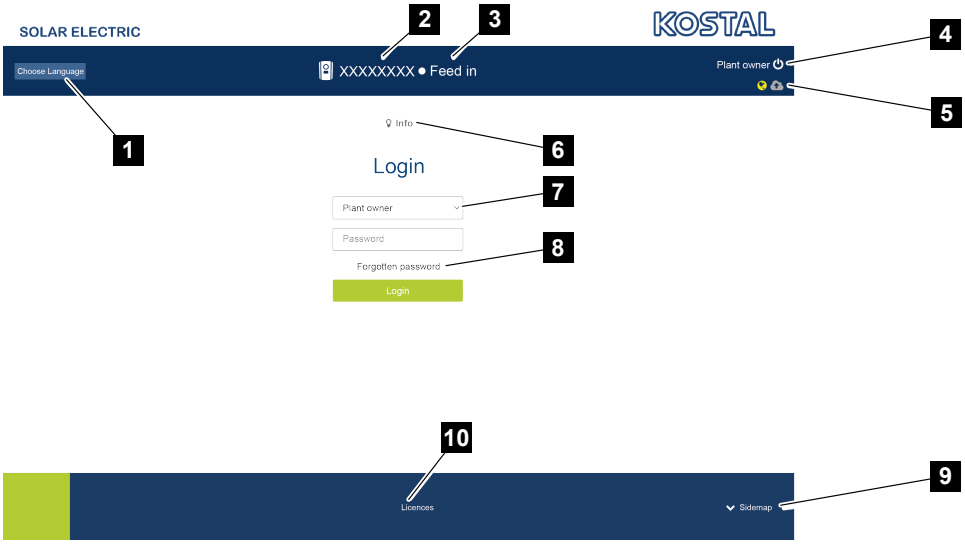

1 Language selection
2 Name of the inverter
3 Inverter status message
4 Webserver login/logout
5 Status message for solar portal connection/inverter system update
6 Retrieval of device information
7 Login as plant owner or installer
8 Reset password for Webserver
9 Access to sitemap
10 Licence information

The Webserver forms the graphic interface between the inverter and user. Even if you don't log in, you can find information about your PV system here, including, for example, device information and the current status of the inverter.

The Webserver is called up on the inverter via a web browser (e.g. Microsoft Edge, Firefox or Google Chrome). Both devices must be on the same network. Any device that has a web browser can be used to call up the Webserver (e.g. a PC, smartphone or tablet).

Enter the IP address or name of the inverter into the web browser. The inverter's IP address can be found on its display.

© 2024 KOSTAL Solar Electric GmbH

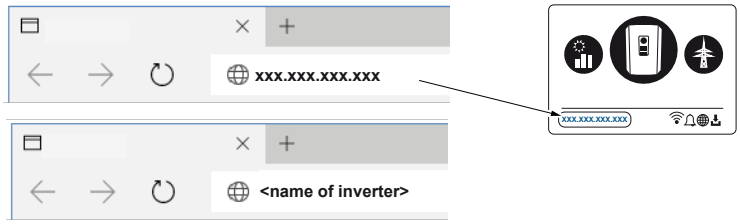

A user can log in to the Webserver as a ***Plant owner*** or ***Installer*** using ***Login***.

To log in as a ***plant owner***, you need a password, which has to be generated for the first login by clicking on ***Forgotten password***. For this, you also need the master key from the type plate.

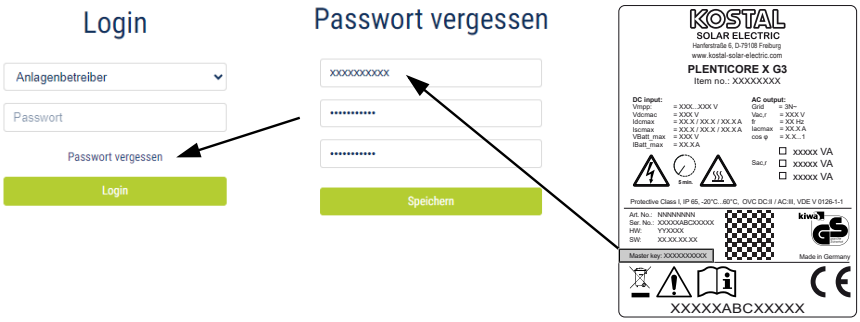

To log in as an ***installer***, you need the master key from the inverter's type plate and your service code, which can be requested from our service team.

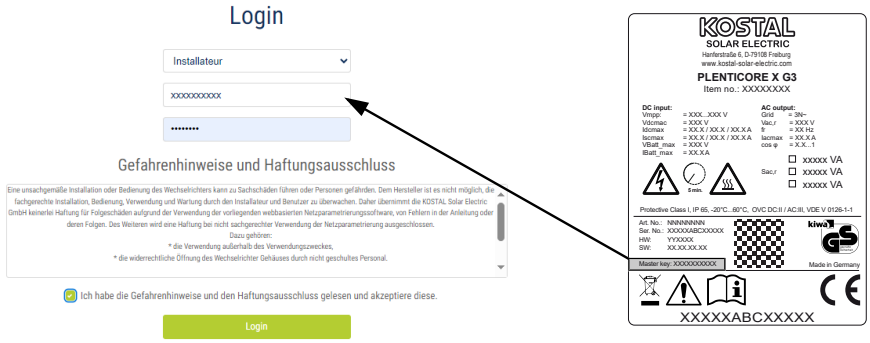

9.3.2 Start screen

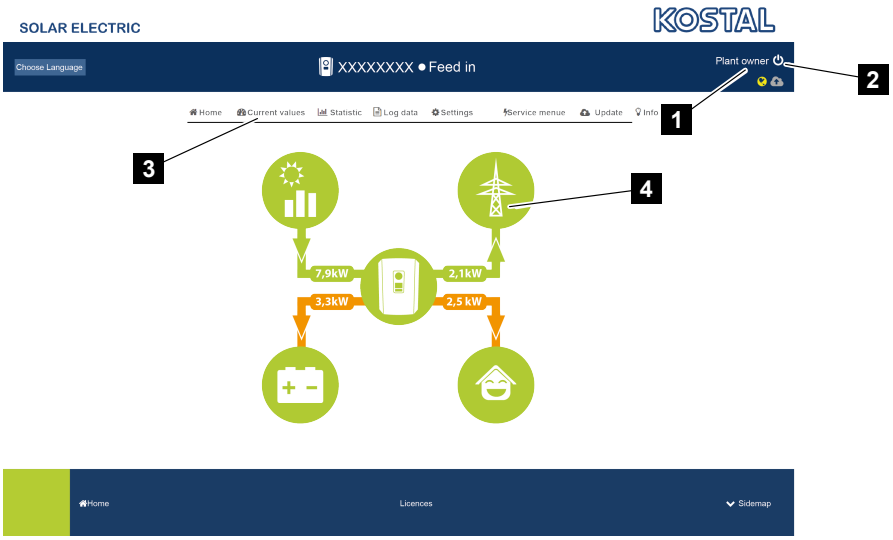

1 User logged in
2 Logout from the Webserver
3 Inverter menus
4 Energy flow diagram

INFO

Once you have logged in as plant owner or installer, you can choose from different menu items. Different menus can be used, depending on the user role.

The menu items described here may differ depending on the software version in use.

The Webserver allows the user to view key information, current values, events and inverter versions.

The following menus are available to the user in the Webserver:

- **Home**
  Shows power flow diagram
- **Current values**
  Using various statistics, the user can display the current values for daily, monthly, annual and total yield. Detailed information can be displayed by expanding the statistics.
- **Statistics**
  Shows information about the inverter's yield data for daily, monthly, annual or total time periods.
- **Log data**
  Here the inverter's log data can be downloaded in full or for a limited time period.

© 2024 KOSTAL Solar Electric GmbH

- **Settings**
  These menu items can be used to configure the basic settings for the inverter (e.g. inverter name, network settings, specifications relating to remuneration, retrieval of log data).
- **Service menu**
  These menu items can be used by the installer to configure the inverter's hardware (e.g. active power reduction or special grid settings which have been specified by the energy provider).
- **Update**
  This menu item can be used to update the inverter via a software update and to configure the system update method, e.g. with automatic updates.
- **Info**
  On the Info page, the user can view events pending in the inverter and the inverter's installed versions (e.g. software, MC, IOC, hardware). This information can also be viewed without logging in to the Webserver.

© 2024 KOSTAL Solar Electric GmbH

9.3.3 Home menu

The ***Home*** menu displays the power flow diagram.

The directions of flow for the energy to and from the inverter are shown. The values indicate the power currently present.

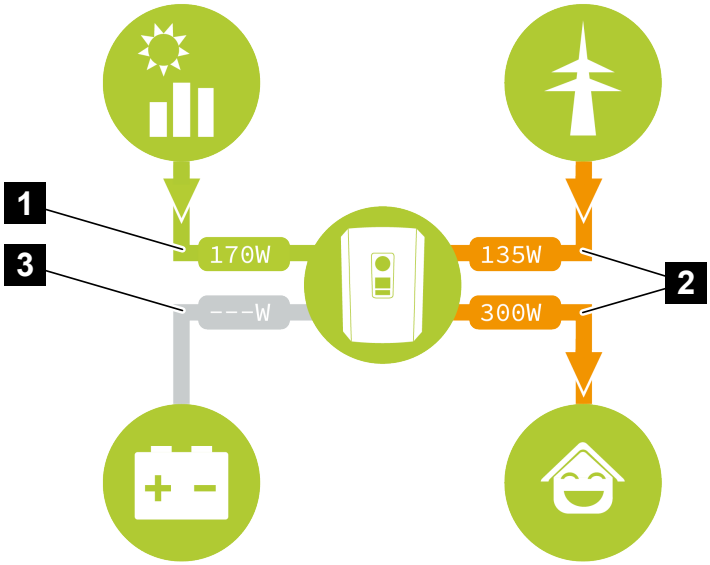

1 Green: Energy is being supplied

2 Orange: Energy is being purchased/consumed

3 Grey: No energy flow

© 2024 KOSTAL Solar Electric GmbH

9.3.4 Current values menu

The different statistics show the user the current energy values on the AC and DC side for the daily, monthly, annual and total yield. Detailed information can be displayed by expanding the statistics.

PV generator

Shows the generated voltage, current and energy of the PV generators per DC input.

Parameter	Explanation
DC input x	Shows the generated voltage, current and power of the PV generators per DC input.

Inverter

Shows the current status of the inverter, current performance data of the grid side (AC) and how the energy is distributed to the phases.

Parameter	Explanation
Status	Inverter operational status. For more information, see **Operational status (display), Page 125**
Digital inputs	Signal status of digital interface terminal for ripple control receiver (input 1-4). The display shows whether the feed-in is currently being limited, e.g. by the energy supplier or by an external battery management system. Settings, e.g. for user-defined active/reactive power reduction, can be configured by going to ***Service menu*** > ***Digital inputs***. **Why active power control?, Page 216**
Output power	Shows how much inverter power is being fed into the home network.
Grid frequency	Shows the current grid frequency.
Cos phi	Indicates the current power factor (cos phi).

© 2024 KOSTAL Solar Electric GmbH

Parameter	Explanation
Limitation on	Shows the current power curtailment setting. If an energy meter (e.g. a KOSTAL Smart Energy Meter) is fitted in the house grid and power limitation is set, the active power is dynamically limited taking home consumption into consideration. This means that in addition to the set power curtailment, the home consumption is added up to the maximum power limit of the inverter.
Phase x	Shows the power values per phase (x = 1, 2 or 3)

House consumption

Display of the current home consumption and the sources from which home consumption is covered.

INFO

In a device network comprising multiple KOSTAL inverters, the data is merged in the portal. Correct and complete visualisation takes place exclusively in the KOSTAL Solar Portal and in the KOSTAL Solar App and not in the individual inverter.

Parameter	Explanation
Current home consumption covered by	Shows the home consumption and the source from which it is currently covered.

Grid

Shows the current performance data of the grid side (AC).

Parameter	Explanation
Grid	**Feed-in**: PV energy is fed into the public grid. **Consumption**: Energy is purchased from the public grid to cover home consumption.

Battery

If a battery is connected to the inverter (only possible if DC3 has been released), the current battery values are displayed.

© 2024 KOSTAL Solar Electric GmbH

INFO

If all values are at zero, the battery is in sleep mode. You can check the status of the battery by going to ***Current values*** > ***Inverter***.

Parameter	Explanation
Status	***Charge***: The battery is being charged. ***Discharge***: Energy is being drawn from the battery.
Battery status	***Normal:*** Normal state ***Equalisation charge:*** The battery is charged from the grid for protection. ***Deep discharge protection:*** The battery is charged from the grid to protect against deep discharge. ***Ext. battery control:*** The battery is regulated via an external control system. ***Battery sleep mode:*** If the battery charging status falls below the configured minimum SoC, this status is displayed and the battery is disconnected from the system. As soon as sufficient excess PV power is available, sleep mode is cancelled and the battery is switched on again. ***Service charging:*** Service charging can only be started by the installer.
Voltage	Shows the battery's charge/discharge voltage.
Current	Shows the battery's charge/discharge current.
Power	Shows the battery's charge/discharge power.
Charging status	Shows the battery's charging status in %.
Charging cycles	Shows the battery's charging cycles.

© 2024 KOSTAL Solar Electric GmbH

9.3.5 Statistics menu

Provides information about the inverter's yield data for daily, monthly, annual or total time periods.

Parameter	Explanation
Day	Shows the yield/consumption values for the current day.
Month	Shows the yield/consumption values for the current month.
Year	Shows the yield/consumption values for the current year.
Total	Shows all yield/consumption values that have accumulated in the inverter.
Diagram	**Self-consumption:** Displays the self-consumption of all of the energy produced. **Degree of self-sufficiency:** The degree of self-sufficiency indicates what percentage of the house's total power requirement is covered by self-generated PV energy. The higher the value, the less energy has had to be purchased from the energy supplier.
CO2 saving	Shows the purely arithmetical CO2 saving that has been saved by the PV energy generated.
House consumption	Shows the home consumption. **From PV:** Shows how much PV energy has been used for home consumption. **From grid:** Shows how much energy has been obtained from the public grid. **From battery:** Shows how much energy from the battery has been used for home consumption.

© 2024 KOSTAL Solar Electric GmbH

9.3.6 Log data menu

Access the log data from the inverter.

INFO

The data is saved in the inverter for around 365 days. When the internal memory is full, the oldest data will be overwritten.

Parameter	Explanation
Log data download	***Restricted time period:*** Download a selected time period of log data from the inverter (max. 100 days).

The log data of the inverter can be downloaded as a file (logData.csv). The data in the file is in CSV format and can be viewed with any spreadsheet programme (e.g. Excel).

The data is saved on your hard drive. After saving, this data can be displayed and further processed.

INFO

If the inverter is not connected to a solar portal, the log data should be regularly backed up.

For more information, see **The log data, Page 239**.

© 2024 KOSTAL Solar Electric GmbH

9.3.7 Settings menu

These menu items can be used to configure the basic settings for the inverter (e.g. inverter name, network settings, specifications relating to remuneration, retrieval of log data).

Basic settings

Set the general parameters of the inverter.

Parameter	Explanation
Inverter name	Input for inverter name (max. 63 characters). The following characters are permitted: a–z, A–Z, 0–9 and "-". Spaces or special characters are not possible. Following the name change the browser connection to the Webserver can be established with the new name or can continue using the IP address.

Time setting

Set time/date or select a time server.

Parameter	Explanation
Use time server (NTP)	Activate/deactivate a time server (NTP server). After activation, the time from the time server is used. By using the NTP server, the switch between summer and winter time is also performed automatically.
Date	Date entry. The time can be taken from the PC.
Time	Time entry. The time can be taken from the PC.
NTP server	Input for IP address or name of NTP server (Network Time Protocol). Other, alternative NTP servers can be added via Plus (+). There are numerous free NTP servers on the network which can be used here.
Time zone	Setting the time zone

Change password

Change Webserver password.

© 2024 KOSTAL Solar Electric GmbH

Parameter	Explanation
Change password	Change Webserver password. The password must comprise at least 8 characters and include the following characters: lower-case letters (a-z), upper-case letters (A-Z) and numbers (0-9).

© 2024 KOSTAL Solar Electric GmbH

Network

Set the inverter's network communication parameters.

LAN

Set the inverter's network communication parameters for LAN.

Parameter	Explanation
Automatically acquire IPv4 address	If the box is ticked, the IP address is generated automatically by a DHCP server. Most routers provide a DHCP server as standard. **NOTE! The option "Automatically acquire IP address" is activated by default. This means that the inverter obtains its IP address from a DHCP server.**
IPv4 address (only with manual configuration)	Enter the IP address of the inverter **NOTE! If the inverter is not allocated an IP address automatically through a DHCP server, the inverter can be configured manually.** **NOTE! The data necessary for configuration, such as IP addresses, subnet mask, router addresses and DNS addresses, can be found on your router/gateway.**
Subnet mask (only with manual configuration)	Enter the subnet mask, e.g. 255.255.255.0
Router/gateway (only with manual configuration)	Enter the IP address of the router
DNS server 1 (only with manual configuration)	Enter the IP address of the DNS server (Domain Name System)
DNS server 2 (only with manual configuration)	Enter the IP address of the backup DNS server (Domain Name System)

WLAN

Set the inverter's network communication parameters for WLAN.

© 2024 KOSTAL Solar Electric GmbH

Parameter	Function
WLAN settings	Setting the communication parameters for the inverter's Wifi connection. The inverter offers various options here.
	Wifi mode: Wifi off The inverter's Wifi interface is deactivated.

© 2024 KOSTAL Solar Electric GmbH

Parameter	Function
	Wifi mode: Access point The inverter offers a Wifi access point. This can be used, for example, to log a PC or smartphone in to the inverter to configure or monitor the inverter. ***SSID***: Displays the inverter's SSID. The SSID consists of ***KOSTAL_*** and the inverter's serial number, e.g. ***KOSTAL_91109ADE00053***. ***SSID visible***: The SSID is visible to other devices in the Wifi search. ***Encryption***: Select Wifi encryption. ***Password***: Enter a password. By default, this is the article number found on the type plate. ***Radio channel***: Select the radio channel. By default, this should be set to "Auto". ***QR code***: Displays the data as a QR code. Scan the code with a smartphone and connect to the inverter. The network data is displayed under the QR code and is provided by the inverter as an access point. ***IPv4 address:*** Inverter IP address. If there are problems with the standard IP address, another one can be entered here. ***Subnet mask:*** Configured subnet mask value. ***Router/Gateway***: IP address for the internal gateway (192.168.67.1). ***DNS Server 1:*** IP address for the DNS server (192.168.67.1). ***DNS server 2***: IP address for the backup DNS server (192.168.67.1). ***DHCP*** ***IP address allocation – from-to:*** Indicates the IP address range allocated for devices connected to the inverter. ***Validity***: After the set minutes have expired, the access point is deactivated.

© 2024 KOSTAL Solar Electric GmbH

Parameter	Function
	WLAN mode: Client The inverter is a Wifi client and can connect to a Wifi gateway in the local home network. In that case, a LAN connection no longer needs to be set up. ***Bridge Mode***: If there are several KOSTAL inverters in a system, the inverter can be used as a WLAN bridge to the existing WLAN router. Other inverters, energy meters or battery storage units can be connected via LAN cable to the inverter serving as a WLAN bridge to establish a connection to the local home network and beyond. ***Find networks***: Press the button to search for available networks in the vicinity of the inverter. The available networks in the vicinity of the inverter are then displayed. Select your local network to which the inverter should connect. ***SSID***: If the network you are looking for is not displayed, this may be because it has been configured to not be visible. You can then enter the network name yourself here. ***Password:*** Enter the password for the network you are looking for here. ***Automatically acquire IPv4 address:*** If the box is ticked, the IP address is generated automatically by a DHCP server. Most routers provide a DHCP server as standard. For manual configuration, you can assign the data yourself.
DHCP server	The DHCP service is automatically activated when ***LAN Mode > Access Point*** is started and no other DHCP service has been detected in the network. The DHCP service is deactivated when the LAN mode is changed or switched off. ***IP address allocation***: Enter the IP range (start-end) and the validity (period 1-28 days).

© 2024 KOSTAL Solar Electric GmbH

Network diagnostics

The inverter allows the connection to the Internet orKOSTAL Solar Portal to be checked using the ***Traceroute*** and ***Ping*** commands.

Parameter	Explanation
Diagnostic tool	***Ping*** Determines the path to a specific host by sending ICMP (Internet Control Message Protocol) echo request messages with different TTL (Time to Live) values to the target. Each gateway along the path must decrement the TTL in an IP packet by at least 1 before it is forwarded. In fact, the TTL is a maximum connection counter. When the TTL of a packet reaches 0, the gateway is expected to return an ICMP Time Exceeded response to the inverter. ***Traceroute*** Determines the path by sending the first echo request message with a TTL of 1 and increasing the TTL by 1 on each subsequent transmission until the target responds or the maximum number of hops is reached. The maximum number of hops is 20 by default and can be specified in the ***Traceroute max. TTL*** field. The path is determined by examining the ICMP timeout messages returned by intermediate gateways and the echo response message returned by the target. However, some gateways do not return Time Exceeded messages for packets with expired TTL values and are not visible to the Traceroute tool. In this case, a row of asterisks (*) is displayed for this hop.
IP address/website	Enter IP address or domain name, e.g. **www.kostal-solar-portal.de**
Ping count	Number of echo requests sent (1-50)
Ping packet size	Number of data bytes being sent (4-1472 bytes)
Ping timeout	Wait time for a response in milliseconds (100-2000 ms)
Traceroute max. TTL	Maximum number of hops (maximum TTL to be reached) in the path to search for the target (10-30)

© 2024 KOSTAL Solar Electric GmbH

Modbus/SunSpec (TCP)

Activate the protocol, which can be used in the inverter to exchange data with external data loggers linked to the inverter via the LAN interface.

Parameter	Explanation
Activate Modbus	Output of the parameter port (1502) and the parameter ID (71) for Modbus/SunSpec. Activate the protocol on the LAN TCP/IP interface. Used for an external data logger, for example. Little-endian and big-endian can be chosen for the byte order. **NOTE! KOSTAL devices and most partner applications use the default setting "little-endian". In some cases it may be necessary to change the byte order to "big-endian".**

© 2024 KOSTAL Solar Electric GmbH

EEBus

You can activate the EEBus protocol on the inverter using this menu item.

EEBus is a data communication standard for devices in the Smart Home. The EEBus standard is openly accessible to all device manufacturers.

Parameter	Explanation
Activate ***EEBus***	The EEBus protocol is activated on the inverter. To allow external EEBus devices to communicate with the inverter, you must trust the external EEBus devices.
Deactivate ***EEBus***	The EEBus protocol is deactivated on the inverter. EEBus devices connected externally to the inverter can no longer exchange data.

This device

Overview of the EEBus device information.

Parameter	Explanation
SKI	***Subject Key Identifier*** (device code/key) of the inverter. This is required for the connection to other EEBus devices. The QR code pictured includes the ***SKI***.
Model	Model name
Name	Name of the EEBus device. The inverter name can be changed by going to ***Settings > Basic settings***.

Applications

Select the applications that are to be used to control the inverter.

Parameter	Explanation
Monitoring of Inverter (MOI)	The inverter provides inverter values. Connected devices can read out this value.
Monitoring of Battery (MOB)	The inverter provides battery values. Connected devices can read out this value.
Limitation of Power Production (LPP)	Limitation of power generation This application allows the inverter feed-in to be controlled by external sources.

© 2024 KOSTAL Solar Electric GmbH

Trusted devices

Displays the devices that are connected via EEBus.

Click on the device to see further information about the device or EEBus connection.

Parameter	Explanation
Model	Model name
Make	Manufacturer
Type	Information about the device type, e.g. energy manager.
Status	Reports on the status of the connection. Available: A connection with the device can be requested. Hourglass - connection pending: The other party still needs to confirm the connection. Communication disrupted: The connection is currently disrupted. If this persists, check the connection to the external EEBus device. Tick - Trusted: The connection is active. Revoke trust: If you click on an EEBus device, another window opens in which you can disconnect the connection by clicking ***Revoke trust***.

Available devices

Displays the available devices that have been found in the local network and that can be connected via EEBus.

If you click on an EEBus device on the list, more information about the device is displayed.

Click on the device you want to connect to and trust it. The devices then appear on the ***Trusted devices*** list. The other party now needs to confirm the request for the connection to be fully set up.

Parameter	Explanation
Model	Model name
Make	Manufacturer
Type	Information about the device type, e.g. energy manager.

© 2024 KOSTAL Solar Electric GmbH

Solar portal

Input for the solar portal configuration. If you are using a solar portal, the log data and events can be sent to the solar portal.

INFO

The solar portal can only be used for inverters which are linked to the Internet.

Parameter	Explanation
Use portal	Activates the transfer to the solar portal.
Portal	Select the KOSTAL Solar Portal or other portals. When selecting ***Other portals***, a portal code must be entered and confirmed with ***Apply***.
Last transfer	Indicates when the inverter last transferred data to the solar portal (provided the function is active).
Last successful transfer	Indicates when the inverter last successfully transferred data to the solar portal (provided the function is active).
Activate log data export with FTP push	If ***Use portal*** has been activated and the ***KOSTAL Solar Portal*** has been selected, the log data can be transferred to an external FTP server and saved. A description of the data can be found at Log file: Entries. To do this, activate the log data export and configure the ***FTP push settings***. ***Server***: Enter the server address at which the FTP server can be reached. ***Port***: Enter the port address (default value is 21). ***Directory***: Specify the directory in which to store the files on the server. ***Export interval***: Select the time interval for the transfer. ***Use encryption***: Use encryption for the data transfer. The server must support encryption for this function to work. ***Authentication required***: If the server is accessed using an ID and password, enter the data for this here. ***Connection status***: Displays the current connection status with the server. ***Last successful export:*** Time of the last successful data transfer.

© 2024 KOSTAL Solar Electric GmbH

© 2024 KOSTAL Solar Electric GmbH

System owner settings

Reset system owner settings to factory settings.

Parameter	Explanation
Reset system owner settings	The values for the basic settings, network, Modbus/SunSpec and solar portal are reset to the factory settings. **NOTE! The option "Automatically acquire IP address" is activated for the network by default. This means that the inverter obtains its IP address from a DHCP server. In this case, the same IP address is usually assigned to the inverter via the DHCP server.**

© 2024 KOSTAL Solar Electric GmbH

9.3.8 Menu - Service menu - General

In the service menu, the installer will find more options for configuring the inverter. Configuring these settings requires precise knowledge of the requirements of the public grid specified by the energy supply company (e.g. reducing active power, setting parameters specified by the energy supply company).

INFO

The settings in this menu require special knowledge of the grid configuration.

Energy management

Select the connected energy meter on the inverter and the restriction for feeding into the public grid.

INFO

The settings in this menu can only be configured after logging in as the installer.

INFO

You will find a list of **approved energy meters** and their purpose in the download area for the product on our website at **https://www.kostal-solar-electric.com**.

Parameter	Explanation
Energy meter	Selection of connected energy meter.
Sensor position	Select the position of the energy meter fitted in the building services. The energy meter must be installed at the grid connection point (position 2). Position 1 (home consumption path) is not possible. Grid connection point = position 2 Energy meter connection

© 2024 KOSTAL Solar Electric GmbH

Parameter	Explanation
Limitation of active power to [W] **(configurable without service code)**	Set the max. feed-in capacity. Requirements relating to this are generally specified by the energy supply company (e.g. a limitation to 70 %). The inverter's max. power serves as the default. Use the calculator to easily calculate the reduction. **NOTE! Incorrect settings possible due to lack of expertise. The plant owner is responsible for correctly setting the active power limitation. Your grid operator will provide details of the permissible active power for your system. We recommend that the installer configures all the settings.**
Activate the function for receiving broadcast control signals	If there is a ripple control receiver connected to another inverter's digital inputs, the signals for active and reactive power control can be allocated to all inverters in the local area network (LAN) by means of UDP broadcast. A local energy manager can also generate signals for active and reactive power control in the local area network. **Activated:** The inverter is controlled by means of a ripple control receiver connected to another inverter. **Deactivated (default):** The signals are not evaluated. The inverter is not controlled by means of a ripple control receiver connected to another inverter.

Generator settings

MPP tracking optimisation settings.

Parameter	Explanation
Generator settings	**Shadow management:** If PV strings are in partial shading, the PV string affected no longer achieves its optimum performance. If shadow management is activated, the inverter adapts the MPP tracker of the selected PV string such that it can operate at maximum possible performance.

Battery settings

If a battery is connected to the inverter, the behaviour and usage of the battery can be configured here.

© 2024 KOSTAL Solar Electric GmbH

Parameter	Explanation
Battery type	Displays the connected battery. The battery type is identified automatically.
Battery control **(only possible with service code)**	The battery can be controlled by an external battery management system (e.g. energy supplier). In this case, the charging power and discharging power of the battery is controlled by the external supplier. The plant owner then receives remuneration for the energy provided, for example from the external supplier. **External battery control, Page 225** **Internal (standard):** The external control is deactivated. **External via digital I/O:** External battery management is carried out via the digital inputs on the Smart Communication Board (terminal X401) of the inverter. A presetting can be selected or the digital inputs can be configured according to the provider's specifications. If there are no control signals, the system switches to internal control. It is still possible to read out the device status in parallel using Modbus (TCP)/SunSpec. **External battery control, Page 225** **External via Modbus (TCP):** The external battery management is provided via the Modbus RTU protocol. The control signals are received via the LAN interface. If the control signals fail to appear for the set duration, the internal control system is activated. It is still possible to read out the device status in parallel using Modbus (TCP)/SunSpec. Also set the time for ***Timeout of ext. battery control***. If the signals via Modbus are interrupted or fail to appear, the ***internal control system*** is activated after the time has expired.

© 2024 KOSTAL Solar Electric GmbH

Parameter	Explanation
Backup mode	Displays the backup function selected during the installation. ***Not activated:*** No backup function has been selected. ***Manual changeover:*** A manual KOSTAL BackUp Switch has been fitted in the house installation which can be used for the backup function if there is a power failure. ***Automatic changeover:*** An automatic changeover box has been fitted in the house installation which can be used for the backup function if there is a power failure. You will find a list of approved KOSTAL Solar Electric **accessories** on our website in the download area for the product.

Battery settings

Battery discharge as of grid demand of [W]	Input of a minimum grid demand value as of which the battery is used. (Standard 50 W.) Example: If a value of 200 W is set, the battery can only be released to cover the home consumption when the measured grid demand from the public grid exceeds 200 W. The battery is blocked again for home consumption when the grid demand falls 50 W below the set value (in this example 150 W).
Min. state of charge (SoC) [%]	Set the minimum depth of discharge of the battery.

© 2024 KOSTAL Solar Electric GmbH

Storage of excess AC energy from local generation	If there is an additional AC energy source in the local house grid (e.g. an additional PV system or a combined heat and power unit), the AC energy generated can be stored in a battery connected to the PLENTICORE plus. **NOTE! The function can only be activated if the energy meter has been installed at the grid connection point (position 2).** **Activated:** The AC energy generated can be stored in the battery. **Deactivated**: Extra generated AC energy is not stored in the battery.

© 2024 KOSTAL Solar Electric GmbH

Time-controlled battery usage	The charging and discharging operation can be configured very flexibly at different times (tariff periods). There are times when the costs of electricity procurement are relatively high (different tariff models). Therefore, it may make sense to allow the battery to discharge during these periods and to allow charging outside of these periods. The times set here can be overridden by the specifications of an activated external battery management system. ***No limitation:*** No conditions have been set for this time period. ***Battery charging blocked, battery discharge permitted in the event of demand from house:*** The battery is not charged in this time period. However, the battery is allowed to discharge if there is demand from the house. ***Battery discharge blocked, battery charging permitted in the event of excess power:*** The battery is not discharged in this time period. However, the battery is charged as soon as there is excess power available. ***Battery charging to xxx% SoC with max. xxx W grid demand, battery discharge in the event of demand from house***: The battery is charged in this time period. Energy is obtained from the public grid until the specified SoC value is reached with the set value for grid demand. This may be appropriate if you have a particularly economical grid energy tariff at certain times. However, the battery is allowed to discharge if there is demand from the house. ***Battery charging to xxx% SoC with max. xxx W grid demand, no battery discharge in the event of demand from house***: The battery is charged in this time period. Energy is obtained from the public grid until the specified SoC value is reached with the set value for grid demand. This may be appropriate if you have a particularly economical grid energy tariff at certain times. However, the battery is not allowed to discharge if there is demand from the house.

© 2024 KOSTAL Solar Electric GmbH

Advanced battery options

Advanced battery options (only possible with service code)	**Start battery discharge** If the ***SoC*** of the battery is very low during initial commissioning, this function can be used to charge the battery to 100% once. The charging process is performed regardless of the energy source. During the process, ***Service charging*** is displayed on the inverter. The charging process ends when the SoC reaches 50% if there are no energy meters present (e.g. in the ***Battery storage with ext. battery control*** mode).

External hardware settings

Define hardware settings.

Parameter	Explanation
Residual current protection equipment	**Compatibility of type A RCD:** If this function has been activated, type A RCDs can be used as residual current protection equipment. In such cases, the inverter shuts down when the residual current becomes incompatible with a type A RCD. If the function is deactivated, a type B RCD must be used as residual current protection equipment if an RCD is stipulated.

Digital inputs

INFO

The settings in this menu can only be configured after logging in as the installer.

Parameter	Function
none	There is nothing connected to the digital inputs.

© 2024 KOSTAL Solar Electric GmbH

Parameter	Function
active power control	For the connection of a ripple control receiver with standard switching specifications. Detailed description in chapter Self-consumption. **Active power control, Page 215** Activate the distribution of ripple control signals in the house grid. **Activated:** If a ripple control receiver is connected to the inverter, the control signals of this ripple control receiver are distributed in the local LAN network by means of UDP. Other inverters can therefore also be controlled using the connected ripple control receiver. **Deactivated:** The control signals are not distributed in the local LAN network by means of UDP.
User-defined active/reactive power control	For the connection of a ripple control receiver. Unlike the standard active power control, here you can specify up to 16 settings. These are usually specified by the energy supply company. Detailed description in chapter Self-consumption. **Active power control, Page 215** Activate the distribution of ripple control signals in the house grid. **Activated:** If a ripple control receiver is connected to the inverter, the control signals of this ripple control receiver are distributed in the local LAN network by means of UDP. Other inverters can therefore also be controlled using the connected ripple control receiver. **Deactivated:** The control signals are not distributed in the local LAN network by means of UDP.
External battery management	If you have activated external control via the digital I/O ports in the ***Battery settings*** menu, you can define the functions of the inputs here. Assign the desired charge or discharge power to the inputs.

© 2024 KOSTAL Solar Electric GmbH

CEI inputs

Terminal for ripple control receiver CEI for Italy.

Parameter	Explanation
Activate CEI inputs	Activate the CEI input (terminal X403). The switchable shutdown limits must be configured under "Grid and system protection".

Switched outputs

The inverter is equipped with four switched outputs. The switched outputs can switch external consumers for the purpose of increasing self-consumption or can be configured as indicators for statuses or events.

A detailed description can be found in and a description of installation in Connection of switched outputs.

Set the function of the switched outputs (terminal X1401 and X1402) on the Smart Communication Board. The 2-pin terminal can be assigned various functions.

Parameter	Explanation
Output	Shows outputs 1-2 on terminal X1401 and outputs 3-4 on terminal X1402.

© 2024 KOSTAL Solar Electric GmbH

Parameter	Explanation
Operating mode	Select mode: ***Off***: The switched output is deactivated. ***Load control***: Switches on loads when conditions are set (e.g. PV excess). ***SG ready***: Using the SG Ready function is a simple and cost-effective solution to increase PV self-consumption by using a heat pump. The inverter makes it possible to control a heat pump compatible with SG Ready. The SG Ready specification's operating statuses 2 (normal operation) and 3 (start-up recommendation) are supported. ***Wallbox:*** For controlling a wallbox so that it starts the charging process for an electric vehicle connected to the wallbox under certain conditions. The wallbox must have a control input. For more information, please refer to your wallbox's manual. ***Events***: The output is switched when a certain event occurs. The event must be selected from the list. ***External control***: The output can be switched by an external energy management system via the Modbus/TCP protocol.
State	Select the function of the switched output. Function as potential-free ***normally open contact (NO)*** or ***normally closed contact (NC***). ***Normally open contact (NO)*** Normally, the contact is open. The contact is closed when the set conditions are met. ***Normally closed (NC)***. Normally, the contact is closed. The contact is opened when the set conditions are met.
Battery use for switching based on PV power	The settings made here apply to all outputs where switching is configured based on PV power.

© 2024 KOSTAL Solar Electric GmbH

Overvoltage protection

Activate the evaluation of an external message signal. The inverter can evaluate the message output of the overvoltage modules (SPD) and output a message if an event occurs. Information on connection and wiring can be found under Connecting the signal contact for the external overvoltage protection (SPD – Surge Protective Device).

INFO

The settings in this menu can only be configured after logging in as the installer.

Parameter	Explanation
Internal DC overvoltage protection detected	If type 2 internal DC overvoltage protection has been installed in the inverter, it is displayed here.
Evaluation of the external message signal	Activate the function
The monitor signal is interconnected as	Select overvoltage module switching status ***Normally open contact (NO)*** Normally, the contact is open. If an error occurs, the contact closes and the inverter issues a message. ***Normally closed (NC)***. Normally, the contact is closed. If an error occurs, the overvoltage module's contact opens and the inverter issues a message.

Extra options

This function can be used to release additional options for the inverter. This may be e.g. releasing the DC3 input to connect battery storage.

Parameter	Explanation
Release new extra option	Enter an activation code, e.g. to connect a battery. **NOTE! The activation code can be purchased from the KOSTAL Solar online shop. The following link will take you to the shop: shop.kostal-solar-electric.com**
Released options	Overview of options currently released in the inverter

© 2024 KOSTAL Solar Electric GmbH

Operating mode

INFO

The settings in this menu can only be configured after logging in as the installer.

The connected system components are selected during initial commissioning.

If different components need to be selected or deselected later, e.g. because a battery has been added, initial commissioning can be started again here. As soon as the ***Change operating mode*** button has been pressed, the device is restarted and then initial commissioning must be performed again.

Under operating mode, select which components should be taken into consideration in the initial setup (PV generators, installed energy meter, connected battery, automatic or manual connected backup unit).

Parameter	Explanation
PV strings	PV generators are connected to the inverter.
Energy meter	An energy meter is fitted at the grid connection point and communicates with the inverter (e.g. a KOSTAL Smart Energy Meter).
Battery	A battery is connected to the inverter.
Backup box	An automatic backup box, which disconnects the public grid from the house grid, has been fitted at the grid connection point. The automatic backup box transmits the status of the changeover to the inverter via a signal cable.
KOSTAL BackUp Switch	A KOSTAL BackUp Switch, which disconnects the public grid from the house grid, has been fitted at the grid connection point. The manual switch transmits the status of the changeover to the inverter via a signal cable.

You will find a list of approved KOSTAL Solar Electric **accessories** on our website in the download area for the product.

Device restart

The inverter can be restarted using ***Now restart device***. A confirmation prompt appears asking you if you really want to restart the device.

Restarting the device interrupts the feed-in.

The restart takes several minutes. After restarting, you have to log back in.

© 2024 KOSTAL Solar Electric GmbH

9.3.9 Menu - Service menu - Grid parameters

The following menu items can be used to set the parameters in the inverter which are specified by the grid operator.

INFO

The settings in this menu can only be configured after logging in as the installer.

INFO

The settings may only be adjusted by trained and qualified electricians.

The electrician is responsible for ensuring that the applicable standards and regulations are observed and implemented. Work that could affect the electrical power system of the respective energy supply company at the site of the solar energy feed-in may only be carried out by qualified electricians expressly authorised (licensed) by the energy supply company.

This includes changes to the factory preset parameters of the inverter.

The parameters may only be changed on the inverter upon request from the grid operator.

Inappropriate settings can be hazardous and lead to injury or even death of the user or third parties. Material damage to the device and other equipment can also occur.

Parameterisation report

The parameterisation report provides you with an overview of all the important settings for the inverter.

The report can be used to check whether all of the specifications from the energy supplier are set correctly in the inverter. You can print out the report and hand it over to the customer or energy supplier.

The report contains the following parameters:

- Information on the ***device***
- ***Technical data*** on the type plate for the DC input and AC output
- ***Energy management*** (e.g. limitation of active power)
- ***External hardware settings: Residual current protection equipment***
- ***Reactive power settings***
- Settings on the ***digital inputs***
- ***Settling time for external reactive power control***
- ***Settling time for external active power control***

© 2024 KOSTAL Solar Electric GmbH

- ***Power reduction if overfrequency occurs and power increase if underfrequency occurs P(f)***
- ***Power reduction at overvoltage P(U)***
- ***Start-up ramp***
- ***Grid and system protection*** with shutdown limits, start-up conditions

Reactive power settings

The following can be selected:

Parameter	Explanation
No reactive power mode active	No reactive power is set.
Reactive power Q	The grid operator (energy supply company) specifies a fixed reactive power in Var.
Displacement factor cos ϕ	The grid operator specifies a fixed displacement factor cos ϕ.
Reactive power/voltage characteristic curve Q(U)	The grid operator specifies a characteristic curve Q(U).
Displacement factor/power curve cos ϕ	The grid operator specifies a characteristic curve for cos ϕ (P).

Start-up ramp

Specifies the ramp value in per cent per second of Pnenn during restart or network fault expected by the inverter until it starts up.

Parameter	Explanation
Ramp after normal start (grid feed-in) [%Pnenn/s]	Specifies the ramp value after normal start with grid feed-in.
Ramp after normal start (grid demand) [%Pnenn/s]	Specifies the ramp value after normal start with grid demand.
Ramp after grid fault (grid feed-in) [%Pnenn/s]	Specifies the ramp value after grid fault with grid feed-in.
Ramp after grid fault (grid demand) [%Pnenn/s]	Specifies the ramp value after grid fault with grid demand.

© 2024 KOSTAL Solar Electric GmbH

UVRT / OVRT

Configuration of the electrical ability to provide dynamic grid support through electrical generation units.

Parameter	Explanation
UVRT	Configuration of under-voltage ride-through LVRT is the electrical ability to provide dynamic grid support through electrical generation units.
OVRT	Configuration of over-voltage ride-through HVRT is the electrical ability to provide dynamic grid support through electrical generation units.

P(f)

Configuration of power reduction at overfrequency P(f).

Parameter	Explanation
Activation of power reduction at overfrequency P(f)	Activation or deactivation of the function.
Overfrequency characteristic curve	The characteristic curve is defined by a change in frequency which is expressed as in percentage of the rated frequency and causes a 100 % change in rated output.
Activation of power increase at underfrequency P(f)	Activation or deactivation of the function.
Underfrequency characteristic curve	The characteristic curve is defined by a change in frequency which is expressed as in percentage of the rated frequency and causes a 100 % change in rated output.
Conditions for returning to normal mode	Input of frequency range and waiting time in seconds.

P(U)

Configuration of power reduction at overvoltage P(U).

Parameter	Explanation
Activation of power reduction if overvoltage occurs P(U)	Activation or deactivation of the function.

© 2024 KOSTAL Solar Electric GmbH

Parameter	Explanation
Reduction curve	The characteristic curve is defined by a voltage start and end point. The power is reduced by 0% at the start point and by 100% at the end point.
Settling time	Selection of the settling time
Conditions for returning to normal mode	The reduction in power ends once the voltage has fallen below the specified value and the stated waiting time has passed.

Pav,e

Activate the ***Pav,e*** monitoring and configure the threshold values for shutting down/reducing the feed-in capacity.

Parameter	Explanation
Activation of PAV,E monitoring	Activation or deactivation of the function and configuration of the threshold values and shutdown times

Settling time

Set the settling time when externally controlling the reactive power or active power using ripple control receiver or Modbus.

Parameter	Explanation
Settling time [s]	When externally controlling the reactive power (Q, cos ϕ), the settling time can be set in seconds. Select the specifications of the grid operator (energy supply company) here.
Mode	With external control of active power, the following parameters can be set. Standard: no further details needed (default) PT1: Selection of the settling time in seconds. Power gradient: Input of maximum power limit gradient. Enter the specifications of the grid operator (energy supply company) here.

© 2024 KOSTAL Solar Electric GmbH

Grid and system protection

The settings for the grid and system protection may only be changed in exceptional cases for good reason and in consultation with the grid operator (energy supply company).

Parameter	Explanation
Shutdown limits for voltage	The settings for the grid and system protection may only be changed in exceptional cases for good reason and in consultation with the grid operator (energy supply company). Enter the specified values in the corresponding fields.
Shutdown limits for frequency	
Use switchable shutdown limits	
Start-up conditions	

Grid and system protection self-test

Performs a self-test with the set values and outputs the result.

© 2024 KOSTAL Solar Electric GmbH

9.3.10 Update menu

A software update can be imported into the inverter using this menu.

Various update methods are available to the user for this purpose.

Parameter	Explanation
System update	**Manual updates:** The inverter must be updated manually. To do this, click on ***Look for updates*** or drag an update file into the lower field. To start the inverter update, select the ***Execute*** button. **Updating software, Page 254** **Find out about new updates:** The inverter checks at regular intervals whether an update is available. The software update symbol in the header indicates that there is a new update available. To start the inverter update, select the ***Execute*** button. **Automatic updates (recommended):** If this is selected, a new update is installed on the inverter as soon as it is available.
Look for updates	This function can be used to search for current updates on the manufacturer's server. To start the inverter update, select the ***Execute*** button. **Updating software, Page 254**

© 2024 KOSTAL Solar Electric GmbH

9.3.11 Info menu

On the Info page, the user can view events pending in the inverter and the inverter's installed version (e.g. software, MC, IOC, hardware). This information can also be viewed without logging in to the Webserver.

Device information – Devices

Shows information about the versions installed on the inverter. Information about the device can also be viewed without logging in to the Webserver.

Parameter	Explanation
Name	Name of inverter Can be changed by going to ***Settings*** > ***Basic settings***.
Type designation	Inverter type designation
Serial number	Inverter serial number
Article number	Article number of the inverter
SW version	Software version (SW)
MC version	Main controller software version
IOC version	I/O controller software version
HW version	Hardware version
Insulation resistance R_iso	Insulation resistance measuring value
Guideline	The configured country setting for the inverter
Battery input	Status of the battery at DC input 3
Energy fed in in grid mode	Indicates in kWh the amount fed into the house grid in grid mode.
Run time in grid mode	Number of hours in grid mode
Energy in backup mode	Indicates in kWh the amount fed into the house grid in backup mode.
Run time in backup mode	Number of hours in backup mode. Observe the maximum operating hours in backup mode. After **5000 hours** in backup mode, the warranty expires because the components in the inverter are under significantly more load in microgrid operation than in grid mode.

Device information – Network

Provides information about the assigned network settings.

© 2024 KOSTAL Solar Electric GmbH

LAN parameter	Explanation
Network configuration	**Static:** The network settings have been assigned manually. **DHCP:S** The network settings have been obtained automatically.
IPv4 address	Shows the specified IP address of the inverter
Subnet mask	Shows the specified subnet address
Gateway	Shows the router/gateway address
DNS server	Shows the address of the 1st and 2nd DNS server (Dynamic Name Server)
MAC address	Shows the physical address of the network interface

WLAN parameter	Explanation
Network configuration	**WLAN off:** The inverter's WLAN interface is deactivated. **Access point:** The inverter offers a WLAN access point. **Client:** The inverter is a WLAN client and can connect to a WLAN gateway in the local home network.
Network information	**Static:** The network settings have been assigned manually. **DHCP:** The network settings have been obtained automatically.
IPv4 address	Shows the specified IP address of the inverter
Subnet mask	Shows the specified subnet address
Gateway	Shows the router/gateway address
DNS server	Shows the address of the 1st and 2nd DNS server (Dynamic Name Server)
MAC address	Shows the physical address of the network interface

© 2024 KOSTAL Solar Electric GmbH

Solar portal parameters	Explanation
Last connection to the solar portal	Last transfer, shown in minutes or as a time

Device information – Events

Up to 10 events can be displayed. Additional information about the event can be displayed via Info (i) next to the event.

© 2024 KOSTAL Solar Electric GmbH

10. KOSTAL Solar App/Tools

10.1 KOSTAL Solar App 191
10.2 KOSTAL Solar Portal 192

© 2024 KOSTAL Solar Electric GmbH

10.1 KOSTAL Solar App

The free KOSTAL Solar App offers you professional monitoring of your photovoltaic system. You can use the KOSTAL Solar App to access all the functions on your smartphone or tablet at any time.

To set up and use the app, you will need access to the KOSTAL Solar Terminal and the KOSTAL Solar Portal and to have an inverter set up there. To log in to the app, use the same login details as for the KOSTAL Solar Terminal.

You can use the KOSTAL Solar App to monitor your photovoltaic system and view relevant system data both at home and when you are out and about. It allows you to access the consumption and generation data over various time periods, such as day, week, month and year, and to view your photovoltaic system's historical data. This means that with the KOSTAL Solar App you are always up to date.

Download the free KOSTAL Solar App today and benefit from new and advanced functionalities.

Additional information about this product is available on our website **www.kostal-solar-electric.com** under ***Products > Tools and applications > KOSTAL Solar App***.



© 2024 KOSTAL Solar Electric GmbH

10.2 KOSTAL Solar Portal

The KOSTAL Solar Portal is a free online platform for monitoring the PV system.

The Solar Portal enables the operation of the inverter to be monitored via the Internet. For this purpose, the inverter sends the PV system's yield data and event messages to the solar portal via the Internet.

The information is then stored in the solar portal. You can view and call up this information via the Internet.

This means that the KOSTAL Solar Portal protects your investment in a PV system from yield losses, e.g. by actively warning you by e-mail when an event occurs.

Register for the KOSTAL Solar Portal free of charge using the KOSTAL Solar Terminal at **https://terminal.kostal-solar-electric.com**.

KOSTAL Solar Terminal

The Solar Portal has the following functions:

- Worldwide portal access via the Internet
- Graphic representation of the power and yield data
- Visualisation of data and thus being made aware of how to optimise self-consumption
- Notification of events by e-mail
- Data export
- Sensor evaluation
- Display and proof of a potential active power reduction by the grid operator
- Storage of log data for long-term and reliable monitoring of your PV system
- Providing system data for the KOSTAL Solar App

Prerequisites for using the Solar Portal:

- The inverter must have a connection to the Internet.
- Data transfer to KOSTAL Solar Portal must be activated in the inverter.
- The inverter must not be assigned to any other PV system in the KOSTAL Solar Portal.
- The inverter must be assigned to your PV system in the KOSTAL Solar Portal.

© 2024 KOSTAL Solar Electric GmbH

You can find more information about this on our website **www.kostal-solar-electric.com**.

KOSTAL Solar Electric

© 2024 KOSTAL Solar Electric GmbH

11. Connection types

11.1 Connecting methods between inverter/computer 195
11.2 Use inverter as WLAN bridge for other devices 196
11.3 Settings on the computer 198
11.4 Create LAN direct connection between inverter/computer 199
11.5 Remove LAN direct connection between inverter/computer 201

© 2024 KOSTAL Solar Electric GmbH

11.1 Connecting methods between inverter/ computer

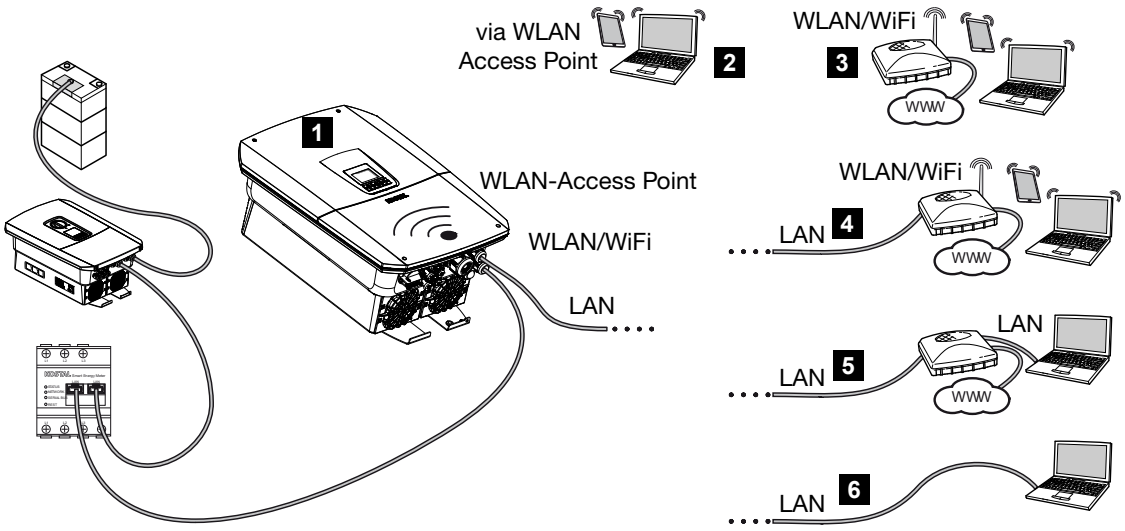

1 Inverter with LAN/WLAN interface and WLAN access point

2 WLAN access point connection for initial commissioning or for direct access to the inverter Webserver on site

3 WLAN connection via WLAN router

4 LAN connection via WLAN router

5 LAN connection via switch/hub/router

6 LAN direct connection (only with manual IP configuration)

The inverter can be contacted via a computer or tablet using various types of connection to configure it or retrieve data. Several settings should be noted here. These are explained in more detail on the following pages.

INFO

If the inverter is to be accessed via the Internet, this shouldn't take place using unencrypted HTTP access (port 80).

Instead, preference should be given to encrypted access via HTTPS (port 443) and a VPN connection.

For settings relating to the router or Internet, please contact the provider of the router, your provider or a network specialist.

© 2024 KOSTAL Solar Electric GmbH

11.2 Use inverter as WLAN bridge for other devices

If several devices have been installed in a system and they are connected together via LAN, the inverter can be used as a WLAN bridge.

The inverter offers the following interfaces for this:

- 2 x LAN interfaces to which other devices can be connected
- WLAN interface for communicating with a WLAN router
- WLAN access point for communication with a computer

Inverter as WLAN bridge

If there are several KOSTAL inverters in a system, the master inverter can be used as a WLAN bridge to the existing WLAN router in the local network. Other available slave devices are connected to the master inverter via LAN cable.

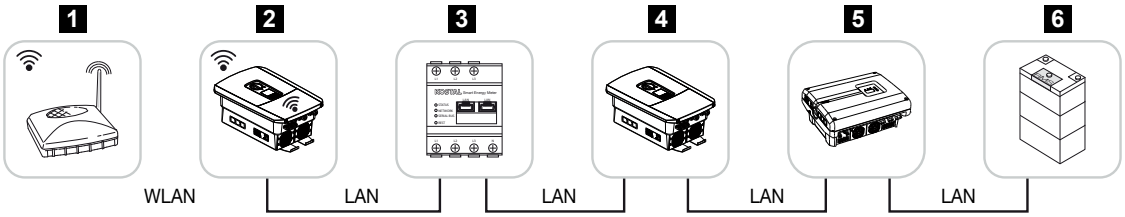

1 DSL/WLAN router in the local home network
2 Master inverter with WLAN client with bridge mode and LAN interfaces for other devices
3 KOSTAL Smart Energy Meter with two LAN interfaces
4 Other inverters with two LAN interfaces
5 Other inverters with two LAN interfaces
6 Storage system with LAN interface

Inverter as access point

The inverter can be used as a WLAN access point. Tablets, smartphones or PCs use the inverter WLAN access point for initial commissioning or for monitoring other KOSTAL inverters.

Other inverters, energy meters or storage systems are connected to the master inverter via LAN cable. For this to work, ***bridge mode*** must be activated in the inverter by going to ***Settings > Network > WLAN***.

© 2024 KOSTAL Solar Electric GmbH

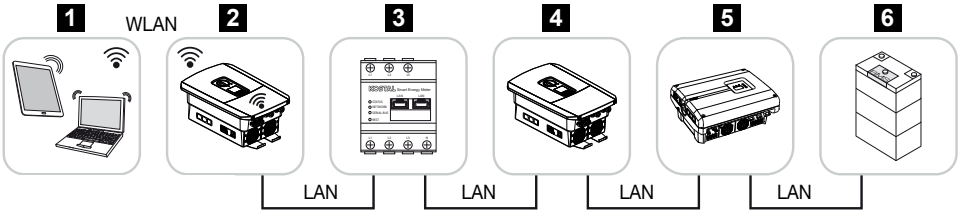

1 Tablet, smartphone or PC with WLAN access on the master inverter
2 Master inverter with WLAN access point and LAN interfaces (gateway)
3 KOSTAL Smart Energy Meter with two LAN interfaces
4 Other inverters with two LAN interfaces
5 Other inverters with two LAN interfaces
6 Storage system with LAN interface

© 2024 KOSTAL Solar Electric GmbH

11.3 Settings on the computer

The items listed below relate to the Windows 10 operating system.

- In the computer's Internet protocol (TCP/IP), the options ***Automatically acquire IP address*** and ***Automatically acquire DNS server address*** must be activated. (If the computer can already access the network in which the inverter is located, these settings are no longer required.)

  You can go to the Internet protocol (TCP/IP) settings via the control panel:
  Control Panel > ***Network and Sharing Center*** > ***Change Adapter Settings***.

  Right-click on ***LAN connection*** > ***Properties > Select "Internet protocol (TCP/IPv4)" > Properties***.

- In the computer's LAN settings, the option "Use proxy server for LAN" must be deactivated.

  You can reach the LAN settings via the control panel:
  Control Panel > ***Internet options*** > Tab: ***Connections*** > ***LAN settings***.

© 2024 KOSTAL Solar Electric GmbH

11.4 Create LAN direct connection between inverter/computer

This variant is mainly used when configuring using the Webserver on site.

DANGER

Risk of death due to electrical shock and discharge!

- De-energise device and secure against being switched on again.

INFO

Use a patch cable of category 5 (Cat 5e) or better with a length of max. 100 m.

INFO

If the inverter is connected directly to the PC and has not yet been given its own IP address via a DHCP server, an IP address must be configured manually for the inverter in the inverter itself. This can then be entered into the browser's address bar on the PC to access the Webserver.

Connecting the Ethernet cable to a router integrates the inverter into your own network and the inverter can then be contacted by all computers incorporated in the same network.

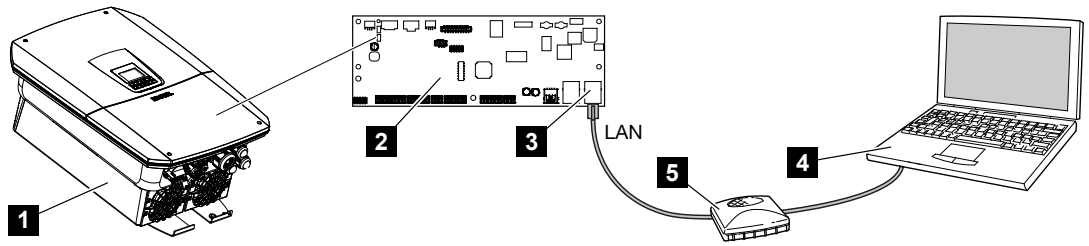

1 Connect inverter with Ethernet cable
2 Smart Communication Board with LAN interface
3 Ethernet cable (LAN)
4 PC
5 Router

© 2024 KOSTAL Solar Electric GmbH

Connect inverter with router or computer

1. Turn the DC switch on the inverter to OFF.
2. Switch off inverter AC line circuit breaker and secure it against being switched on again.
3. Remove the cover.
4. Remove the terminal compartment's cover.
5. Insert Ethernet cable into the inverter and seal with sealing ring and union nut. Tighten union nut to the prescribed torque. Tightening torque: 8 Nm (M25).
6. Connect Ethernet cable to LAN interface of Smart Communication Board.
7. Connect Ethernet cable to a router or computer.
8. Close cover of terminal compartment and inverter (2.0 Nm).
9. Activate fuses and DC switch.

✓ The inverter is connected to the computer.

© 2024 KOSTAL Solar Electric GmbH

11.5 Remove LAN direct connection between inverter/computer

DANGER

Risk of death due to electrical shock and discharge!

- De-energise device and secure against being switched on again.

INFO

Leave the Ethernet cable connected to the inverter. This makes it possible to easily carry out further queries or setting configurations on the inverter.

If connecting through a router, there is no need to remove the connection.

Remove the connection between inverter and computer

1. Turn the DC switch on the inverter to OFF.
2. Switch off inverter AC line circuit breaker and secure it against being switched on again.
3. Remove the cover.
4. Remove the terminal compartment's cover.
5. Disconnect Ethernet cable from the inverter and remove from the inverter
6. Put the plug seal back in place in the cable feed.
7. Close the inverter cover.
8. Switch on the line circuit breaker.
9. Switch the DC switch on the inverter to ON.

✓ The inverter is once again in operation.

© 2024 KOSTAL Solar Electric GmbH

12. Switched outputs

12.1 Switched outputs at a glance 203
12.2 Set up self-consumption control for load control 205
12.3 Set up self-consumption control for heat pumps (SG Ready) 208
12.4 Set up self-consumption control for wallbox 210
12.5 Set up switched output for reporting events 212
12.6 Switched output via external control 214

© 2024 KOSTAL Solar Electric GmbH

12.1 Switched outputs at a glance

Four digital switched outputs with a load capacity of 24 V/100 mA each are available at the inverter's X1401/X1402 terminals. These can be used to control existing loads or actuators.

In addition, events that occur can be signalled. If there is an event message, the inverter can trigger an actuator connected to the switched output (warning light, message signal, smart home system), providing information about the event that occurred.

For this purpose, the switched outputs can be configured for the different operating modes via the Webserver. The corresponding switched output is activated or deactivated as soon as the configured conditions occur.

In the ***Load control***, ***SG ready*** and ***Wallbox*** modes, you can select the basis for the switched output to be activated. You can decide whether the output switches based on the excess power fed into the utility grid or when a certain PV power is exceeded.

The ***Battery use for switching based on PV power*** area can be used to configure how a connected battery is used. The settings made here apply to all switched outputs that switch based on ***PV power*** . If the switch-on conditions are met, the battery may be discharged to the set SoC by the connected consumer.

For information on connecting self-consumption control, see **Connection for self-consumption control, Page 87**.

Configure self-consumption control

1. Call up the Webserver.
2. Go to ***Service menu*** > ***Switched outputs***.
3. Under Configuration for ***Output x***, select the ***Operating mode*** and the ***Status*** of the switch.
4. Go to ***Output x:...*** and configure the conditions, such as ***Switch output based on*** > ***PV power*** or ***Grid excess***.
5. If ***Switch output based on PV power*** has been selected, the ***Battery use for switching based on PV power*** can be configured if desired. This setting applies to all switched outputs that are to be switched based on PV power.
   The switched output is only activated when SoC [%] >=: This determines the SoC from which the relevant switched output, and therefore also the battery, may be used. If the switched outputs are to be used independently of the battery's SoC, set the value to 5%. This means that the battery is always used jointly. If you want the battery to have a reserve, set the value higher or even to 100%. This means that charging the battery has higher priority than using the switched output.

© 2024 KOSTAL Solar Electric GmbH

Allow battery discharge only if SoC [%] >= If the output has been activated, the battery can be used. It is discharged down to the SoC entered here. If the battery should not be used, set the value to 100%.

6. Save the settings.

✓ Configuration is complete.

Possible operating modes

- ***Load control***: The switched output is activated as soon as the configured excess occurs. A consumer can then be switched on via a relay **Set up self-consumption control for load control, Page 205**
- ***SG ready***: Generated energy can be made available to a heat pump **Set up self-consumption control for heat pumps (SG Ready), Page 208**
- ***Wallbox***: Use energy to charge an electric vehicle **Set up self-consumption control for wallbox, Page 210**
- ***Events***: Activate the switched output for certain events, e.g. to activate a signal horn **Set up switched output for reporting events, Page 212**
- ***External control***: The output is switched externally (via Modbus/TCP) and can thus switch a consumer, e.g. a battery **Switched output via external control, Page 214**

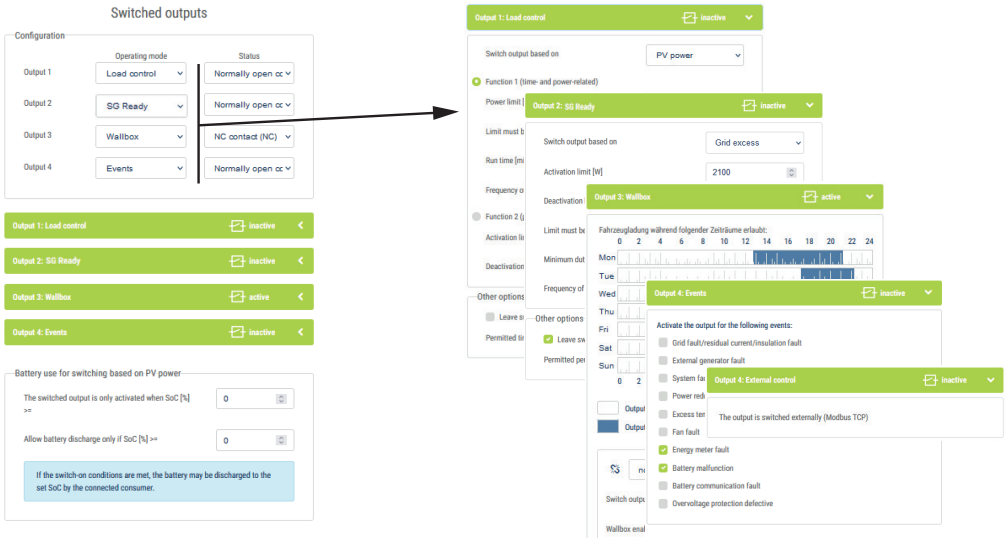

Possible statuses

- ***Normally open contact (NO)***: Normally the contact is open (NO = normally open). The contact is closed when the set conditions are met.
- ***Normally closed contact (NC)***: Normally the contact is closed (NC = normally closed). The contact is opened when the set conditions are met.

© 2024 KOSTAL Solar Electric GmbH

12.2 Set up self-consumption control for load control

Switches on consumers when conditions are set (e.g. PV surplus).

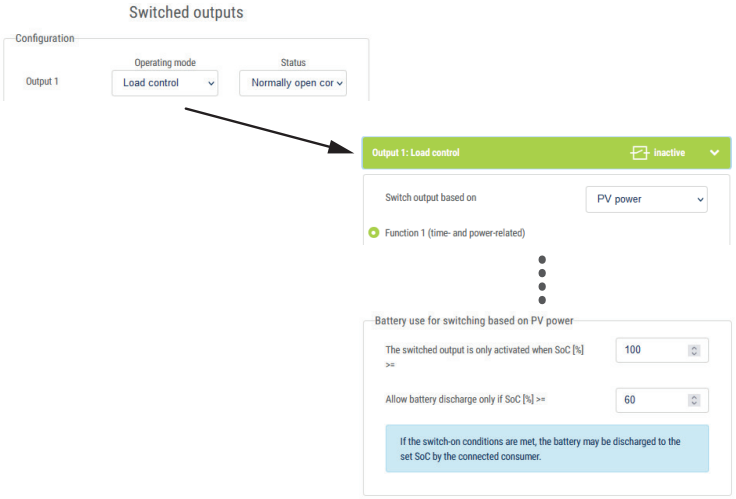

1. Select output, e.g. output 1, and the ***load control operating mode***.
2. Under ***Status***, select whether the switch is closed or opened when the set conditions are met.
3. Underneath, select the set output, e.g. output 1, and set the conditions.
4. Select whether the switched output is to be switched at a specific ***PV power*** or ***grid surplus*** .
5. Choose function 1 or function 2.

INFO

You can find more detailed explanations regarding the selection of function 1 or function 2 in the course of the chapter.

6. Enter values for the function.
7. Optionally activate the value for ***Leave switched output activated in event of power loss or fault*** using the checkbox and enter the time period.
8. Optionally select ***Battery use for switching based on PV power***.
9. Click on "Save".

✓ The "Self-consumption control" function is active.

© 2024 KOSTAL Solar Electric GmbH

Function 1

Control of self-consumption by time

When a certain output **P1** has been generated for a certain time **T1**, the function is activated and the consumer is connected.

The inverter remains in ***Self-consumption*** mode for the run time **T2**. Following the run time **T2**, the inverter ends self-consumption.

This is the end of the interval. This interval can be repeated several times with the ***Activation*** option.

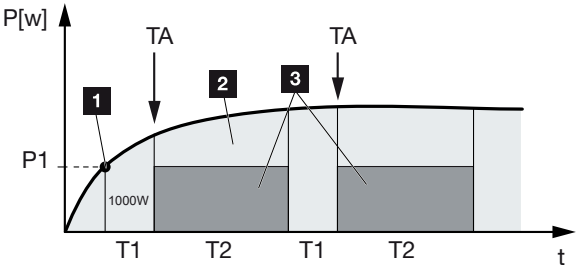

1 Power limit

2 Feed-in to the public grid

3 Self-consumption via self-consumption contact

P1: Power limit

This is the minimum power (in watts) that must be generated (e.g. 1000 W) before the consumer is switched on. You can enter any value from 1 watt to 999,000 watts.

T1: Period of stable exceeding of the power limit (P1)

The inverter must exceed the set **power limit** for this period of time (in minutes) before the consumer is switched on. You can enter any value between 1 and 720 minutes (= 12 hours).

T2: Run time

The connected consumer is switched on for this period (in minutes) when both of the above conditions have been met. You can enter any value between 1 and 1440 minutes (= 24 hours). The run time ends when the inverter shuts off. The run time is ended and not continued again if the inverter has not produced any current for three hours.

TA: Frequency of activation [number/day]

Number/day indicates how often self-consumption is activated per day.

Function 2

Control of self-consumption by output

When a certain output P1 has been generated (e.g. 1000 W), the inverter switches.

When the output falls below P2 (e.g. 700 W), the inverter ends self-consumption and resumes feeding current into the grid.

© 2024 KOSTAL Solar Electric GmbH

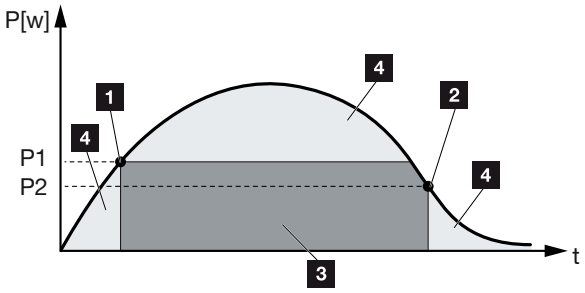

1 Activation limit
2 Deactivation limit
3 Self-consumption via self-consumption contact
4 Feed-in to the public grid

P1: Activation limit
This is the minimum power (in watts) that must be produced before the consumer is activated. You can enter any value from 1 watt to 999,000 watts.

P2: Deactivation limit
The consumer is switched off when the power generated falls below this value.

Other options

Leave switched output activated in event of power loss or fault

With this function, self-consumption is only discontinued after the set delay time **T1**. In the event of power loss, fault **(Tx)** and failure to achieve the shutdown limit, the consumer remains switched on for the set time **(T1)**.

If the fault period or the period of power loss is shorter than the set delay time, self-consumption remains activated.

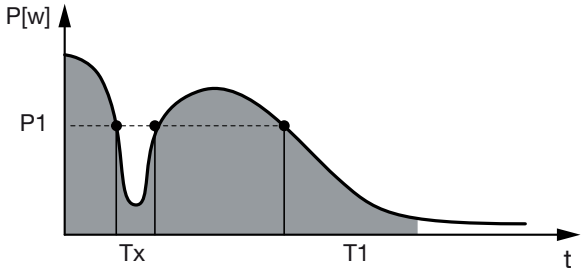

P1: Power limit

T1: Delay time in the event of power loss/fault

Tx: Fault, power loss or failure of the inverter

Dashed area: Self-consumption active

© 2024 KOSTAL Solar Electric GmbH

12.3 Set up self-consumption control for heat pumps (SG Ready)

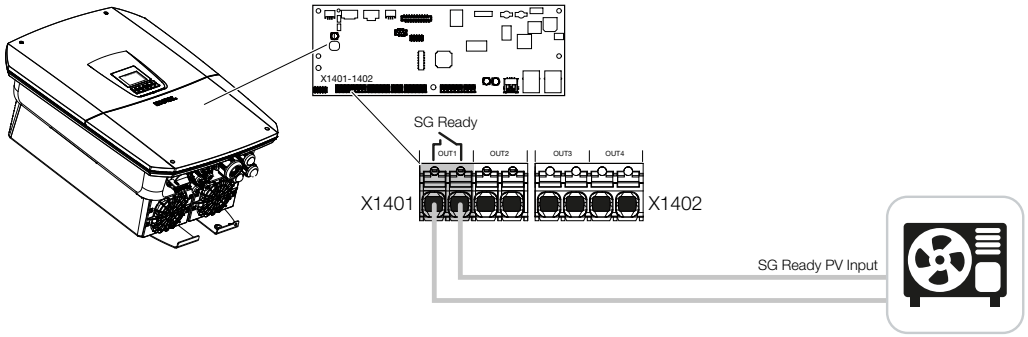

Using the **SG Ready** function is a simple and cost-effective solution to increase PV self-consumption by using a heat pump. The inverter allows a heat pump with **SG Ready** compatibility to be controlled.

The **SG Ready** specification's operational status 2 (normal operation) and operational status 3 (start-up recommendation) are supported.

The heat pump/heating element is switched on when the set conditions are met. The **SG Ready** mode can be configured for this purpose via the inverter's Webserver menu.

In this mode, the switching signal is used to give the heat pump a start-up recommendation (in accordance with **operational status 3 of** the **SG Ready specification**). In this operational status, the heat pump runs within the controller in boosted operation for heating and domestic hot water preparation.

The configured switch-on limit should therefore at least correspond to the power consumption required for boosted operation.

For further information on connection and power consumption, please refer to the heat pump's operating manual.

Example setting: Webserver

Switched output no. 1 (OUT1) is used. This should switch based on grid excess power. According to the manufacturer, the heat pump's boosted operation (operating mode 3) requires 1700 W.

The ***activation limit*** is set to the 1700 W required for boosted operation.

50 W is entered under ***deactivation limit*** .

As soon as the 1700 W power is exceeded for the set period, the output becomes active for the selected duration, which is at least 10 minutes. The grid excess drops below the deactivation limit to approx. 0 W as soon as the heat pump switches to enhanced operation.

After the ***minimum duty cycle*** has elapsed, the switched output becomes inactive again.

© 2024 KOSTAL Solar Electric GmbH

You can set the maximum number of times the behaviour described above may be repeated per day in the ***Frequency of activation*** field.



INFO

If the output is to be switched based on ***PV power***, we recommend adding the base load of the house consumption (approx. 150 to 500 W) to the activation and deactivation limit.

SG Ready settings

Parameter	Explanation
Switch output based on	Grid excess or PV power.
Activation limit [W]	The switched output is activated as of this value.
Deactivation limit [W]	Below this value, the switched output is deactivated.
Limit must be exceeded for [min]	The activation/deactivation limit must be exceeded by the number of minutes specified before the switched output is activated/deactivated. This prevents devices from being repeatedly switched on/off if, for example, no PV energy is available for a short time. 10 minutes is reasonable here.
Minimum duty cycle [min]	The switched output remains active at least until the set time has been reached. This prevents devices from being repeatedly switched on/off. The **SG Ready** specification states that the signal must be active for at least 10 minutes. Therefore, it is not possible to set a lower value.
Frequency of activation [number/day]	Indicates the maximum number of activations per day. For heat pumps, it is recommended to enter a maximum of 10 activations per day.

© 2024 KOSTAL Solar Electric GmbH

12.4 Set up self-consumption control for wallbox

The inverter allows a compatible wallbox connected to the switched output to be controlled. This is a simple and cost-effective solution to increase PV self-consumption by using a wallbox.

Using the switching signal, the inverter can give the wallbox approval for charging or change the charging current specification. For further information on activation, please refer to the wallbox manual.

The period during which the output can be activated can be set based on a 24h period for each day of the week. Charging the electric vehicle is permitted during the set time periods.

With the help of an AND link/an OR link, the approval to charge the electric vehicle can additionally be combined with the PV power or grid surplus power.

This makes it possible to charge an electric vehicle directly from PV. Charging the connected battery is given secondary priority. This means that the electric vehicle is charged first via the wallbox and only then is the storage system charged.

It is not possible to use the storage system connected to the inverter when the output is active.

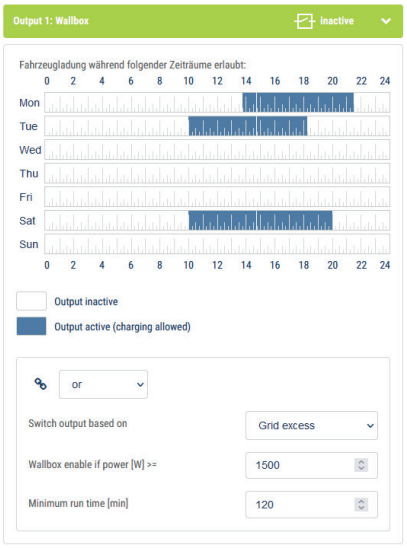

Parameter	Explanation
Allow vehicle charging during the following periods	The table allows configuration of the time periods in which the electric vehicle may generally be charged. The time periods can be set via mouse click/tap. The first click sets the start time and the second the end time. Then select the function (active/inactive).

© 2024 KOSTAL Solar Electric GmbH

Parameter	Explanation
Link	No link/AND link/OR link If ***No*** linkage is selected, the lower switching settings based on power and the wallbox enable are greyed out.
Switch output based on	***Grid excess***: There is excess available at the grid connection point. ***PV power***: Excess PV is available.
Wallbox enable if power [W] >=	Activated when the power is greater than the set value.
Minimum run time [min]	The switched output remains active at most until the set time has been reached.

© 2024 KOSTAL Solar Electric GmbH

12.5 Set up switched output for reporting events

The output is switched when one or more events are active in the inverter. The user is informed about the event at the same time. The output can, for example, switch to a smart home system that processes the signal.

Example: The output can be used to switch off a consumer if a certain event occurs or to activate a signal lamp to indicate a fault.

1. Select event from the list.
2. Optionally select ***Battery use for switching based on PV power***.
3. Click on ***Save***.

✓ The "Self-consumption control" function is active.

A switched output can be configured for the following events.

Event	*Setting condition*	*Resetting condition*
Grid fault/residual current/insulation fault	A grid fault/residual current/insulation fault is active.	A grid fault/residual current/insulation fault is no longer active.
External generator fault	An external generator fault is active.	An external generator fault is no longer active.
Power reduction	Power reduction is active.	Power reduction is no longer active.
System fault	A system fault is active.	A system fault is no longer active.
Excess temperature	Excess temperature is active.	Excess temperature is no longer active.
Fan fault	A fan fault is active.	A fan fault is no longer active.
Energy meter fault	An energy meter fault is active.	An energy meter fault is no longer active.
Battery malfunction	A battery malfunction is active.	A battery malfunction is no longer active.
Battery communication fault	The event (ID 5013) is active.	The event (ID 5013) is no longer active.
Backup operation active	The inverter generates backup power and is disconnected from the public grid.	The inverter does not generate backup power and is connected to the public grid.

© 2024 KOSTAL Solar Electric GmbH

Event	*Setting condition*	*Resetting condition*
Ext. overvoltage protection defective	There is an active signal at the SPD monitor input.	There is no longer an active signal at the SPD monitor input.
Int. DC overvoltage protection defective	The internal DC overvoltage protection is configured in the "Overvoltage protection" menu as "used" and is defective.	The internal DC overvoltage protection is configured as "used" and is error-free or the internal DC overvoltage protection has been configured as "not used" in the "Overvoltage protection" menu.
External insulation fault	An insulation fault is active.	An insulation fault is no longer active.
External residual current	Residual current is active.	Residual current is no longer active.
Internal parameterisation fault	A parameterisation fault is active.	A parameterisation fault is no longer active.
Internal communication fault	A communication fault is active.	A communication fault is no longer active.

© 2024 KOSTAL Solar Electric GmbH

12.6 Switched output via external control

The switched output can be switched by an external energy management system via the Modbus/TCP protocol.

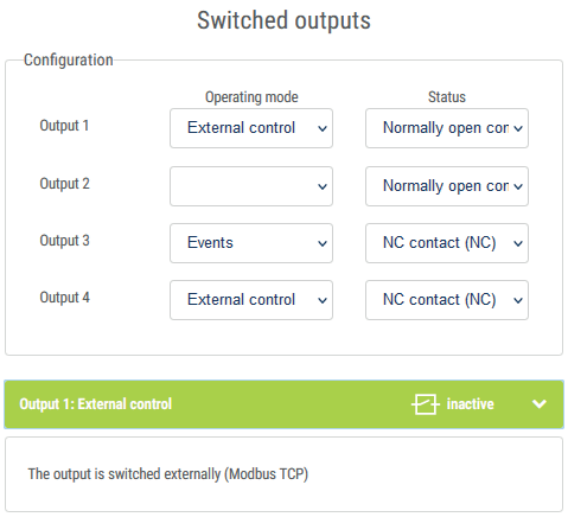

INFO

Activate Modbus/TCP in the inverter.

The Modbus/TCP protocol must be activated in the inverter under ***Settings > Modbus / SunSpec (TCP)***.

© 2024 KOSTAL Solar Electric GmbH

13. Active power control

13.1 Why active power control? 216
13.2 Limitation of the PV feed-in capacity 217
13.3 Active power control with a ripple control receiver 218
13.3.1 Activating active power control 219
13.3.2 Activate receipt of control signals for active power control 219
13.4 Active power control using smart measuring systems 221
13.5 Active power control via EEBus 223

© 2024 KOSTAL Solar Electric GmbH

13.1 Why active power control?

Some countries or local energy supply companies may stipulate that the full power of the PV system must not be fed into the public grid (e.g. by limiting it to just 70%).

In this case, some energy supply companies therefore offer the owners of PV systems the option of having the energy supply company regulate their system using variable active power control, and thus increasing the generation capacity to up to 100% again.

Ask your energy supply company what application rule applies to you.

The planner of a PV system can usually choose between two types of active power control:

INFO

When selecting active power control, check to determine which of the two options offers the better energy yield for you.

- Limitation of the feed-in capacity to a defined percentage of the PV power at the grid connection point
  Limitation of the PV feed-in capacity, Page 217
- Active power control with a ripple control receiver
  Active power control with a ripple control receiver, Page 218

© 2024 KOSTAL Solar Electric GmbH

13.2 Limitation of the PV feed-in capacity

The feed-in capacity must be reduced to the value specified by the energy supply company (e.g. 70 %) if the energy supply company stipulates a limitation of the PV power and the active power control on your system cannot be achieved with a ripple control receiver or you do not want to use active power control.

INFO

Incorrect settings due to lack of expertise.

The system operator is responsible for correctly setting the active power limitation. Your grid operator will provide details of the permissible active power for your system.

We recommend that the installer configures all the settings.

Ask your energy supply company what power limitation applies to you.

The power limitation can be set by going to the inverter menu ***Settings/information*** > ***Service menu*** > ***Energy management*** > ***Input of max. feed-in capacity*** or using the Webserver by going to ***Service menu*** > ***Energy management*** > ***Limit to [W]***.

INFO

In some applications, a compatible energy meter may be seen as an attractively priced alternative to the ripple control receiver. Here the feed-in may well be limited by the energy supply company, but the inverter controls the flow of energy (self-consumption in house grid and feed-in to the public grid) in such a way that the self-produced energy is not lost or loss is kept to an absolute minimum.

Dynamic active power control can be activated in the inverter to this end. **Active power control, Page 215**

© 2024 KOSTAL Solar Electric GmbH

13.3 Active power control with a ripple control receiver

The active power of the inverter can be controlled directly by the energy supply company via a ripple control receiver.

INFO

The ripple control receiver can be connected directly to the inverter's Smart Communication Board or is connected to another inverter.

With this technology, the generated power can be regulated at four levels:

INFO

The four standard specifications for power limitation can be changed using the Webserver. However, the provisions of the energy supply company must be observed.

- 100 %
- 60 %
- 30 %
- 0 %

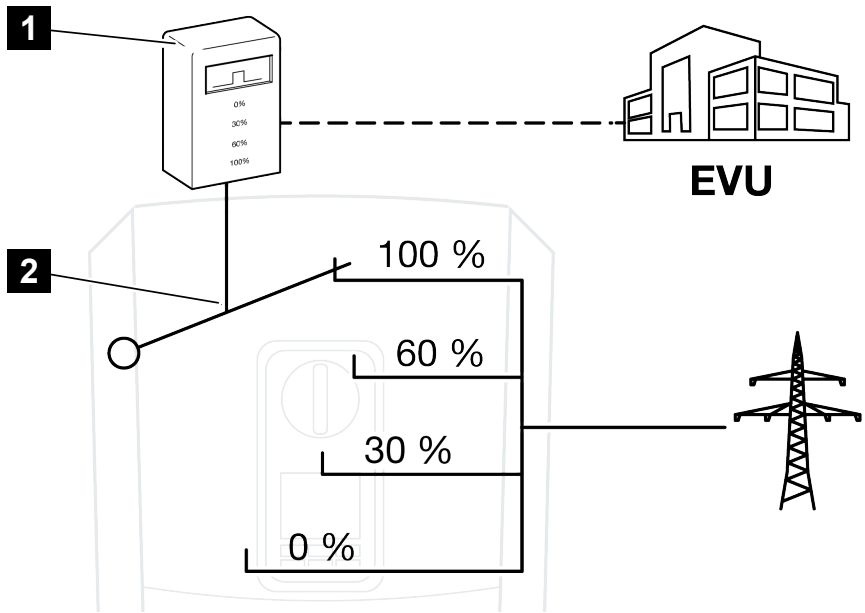

1 Ripple control receiver

2 Control electronics of the inverter

© 2024 KOSTAL Solar Electric GmbH

- If the active power control is to be controlled by the ripple control receiver on the inverter, please perform the following steps: **Activating active power control, Page 219**
- If the active power control is to be controlled by another ripple control receiver, please perform the following steps: **Activate receipt of control signals for active power control, Page 219**

13.3.1 Activating active power control

1. Connect inverter and computer. **Connecting methods between inverter/computer, Page 195**
2. Launch an Internet browser.
3. In the address bar of the browser, enter the IP address of the inverter to which the ripple control receiver is connected and confirm with ***Return***.

INFO

The IP address can be read on the inverter's display.

➔ The Webserver page is opened.

4. Log into the Webserver as an installer
5. Go to ***Service menu*** > ***Digital inputs***.

➔ The ***Digital inputs*** page opens.

6. Select the "Active power control" function.
7. If the control signals of this ripple control receiver are to be distributed in the local LAN network (home network) by means of UDP, select ***Activate the distribution of ripple control signals***. Other inverters can therefore also be controlled using the connected ripple control receiver in the local LAN network.
8. Click on the ***Save*** button.

✓ Active power control is enabled.

13.3.2 Activate receipt of control signals for active power control

If a ripple control receiver is already connected to another KOSTAL solar inverter in your house network, you can use the control signals of this ripple control receiver.

© 2024 KOSTAL Solar Electric GmbH

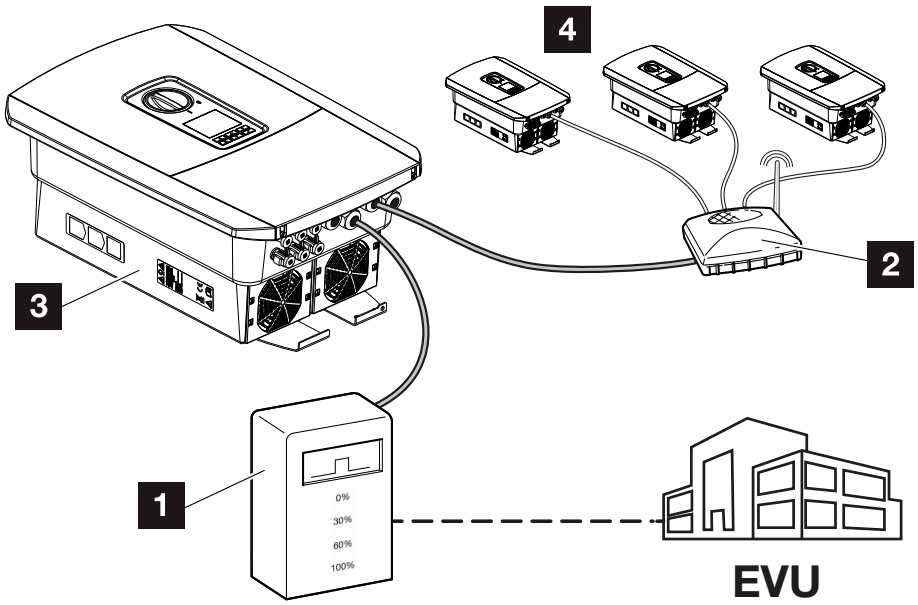

1 Ripple control receiver
2 Router/switch
3 Inverter with ripple control receiver, which distributes the control signals in the home network
4 Inverter without ripple control receiver, which uses the control signals of another ripple control receiver

To do this, proceed as follows:

1. Log into the Webserver as an installer.
2. Go to ***Service menu*** > ***Energy management***.

➔ The ***Energy management*** page opens.

3. Select the ***Receipt of broadcast control signals activated*** function.
4. Click on the ***Save*** button.

✓ The receipt of broadcast control signals is active.

© 2024 KOSTAL Solar Electric GmbH

13.4 Active power control using smart measuring systems

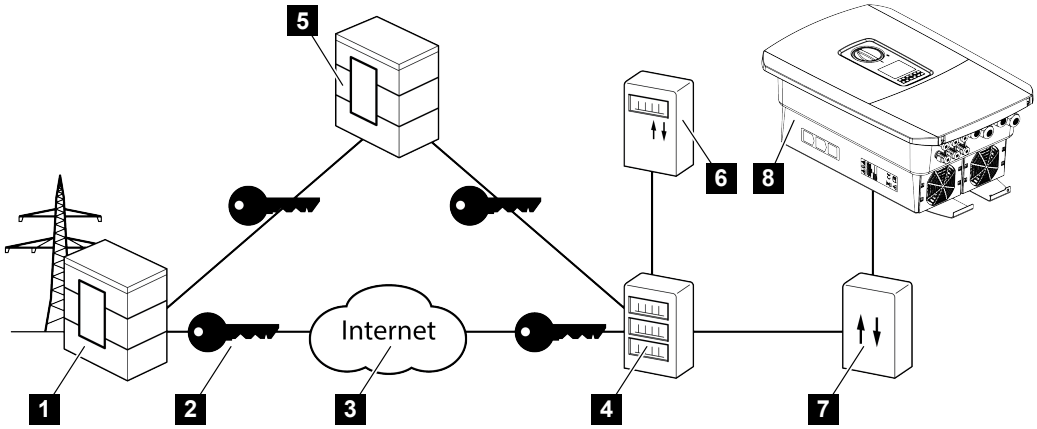

1 Energy supply company
2 Encryption
3 World Wide Web (Internet)
4 Smart meter gateway
5 Gateway
6 Digital power meter
7 Control box
8 Inverter

Smart measuring systems have a key role to play in the energy networks of the future.

In this context, a smart measuring system comprises a measuring device (smart meter or digital power meter), which records the measurement data, and a communication unit (the smart meter gateway), which transmits the data to the energy provider via a secure connection. A control box, connected to the inverter, can then be used by the energy supply company to control the inverter and thereby regulate the PV system's feed-in.

These smart measuring systems are already mandatory in some countries. Ask your energy supply company what applies to you.

Connecting control box

DANGER

Risk of death due to electrical shock and discharge!

- De-energise device and secure against being switched on again.

© 2024 KOSTAL Solar Electric GmbH

1. De-energise the inverter's terminal compartment.
2. Fit the control box on the top-hat rail in the control cabinet or power distributor.
3. Correctly route the communication cable from the inverter to the control cabinet and connect to the control box following the wiring diagram provided by the manufacturer (torque: 0.2 Nm).
4. Connect the communication cable in the inverter to the terminal for the ripple control receiver. Connecting ripple control receiver
5. Connect control box to the smart meter gateway.

✓ The control box is connected.

Connecting digital power meter

1. Fit digital power meter in control cabinet or power distributor.
2. Correctly route the communication cable from the inverter to the control cabinet and connect to the control box following wiring diagram provided by the manufacturer.
3. Connect the communication cable of the digital power meter to the terminal for the digital energy meter in the inverter (torque: 0.2 Nm) Energy meter connection
4. Connect digital power meter to the smart meter gateway.

✓ The digital power meter is connected.

Activating active power control in the Webserver

The inverter must be connected to the local LAN network.

1. Launch an Internet browser on the computer.
2. Call up the inverter's Webserver.
   To do this, enter the IP address of the inverter in the address bar of the web browser and confirm with ***ENTER***. The IP address can be read off from the inverter's display

➔ The Webserver page is opened.

3. Log into the Webserver as an installer.
4. Go to ***Service menu*** > ***Digital inputs***.

➔ The "Digital inputs" page opens.

5. Select the "Active power control" function.
6. If the control signals of this ripple control receiver are to be distributed in the local LAN network (home network) by means of UDP, select ***Activate the distribution of ripple control signals***. Other inverters can therefore also be controlled using the connected ripple control receiver in the local LAN network.
7. Click on the ***Save*** button.

✓ Active power control is enabled.

© 2024 KOSTAL Solar Electric GmbH

13.5 Active power control via EEBus

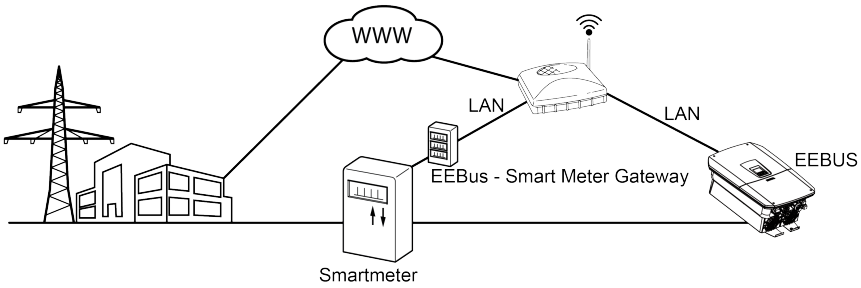

Using a smart meter gateway connected to the inverter, the energy supplier can control the inverter via the EEBus protocol to regulate the feed-in of the PV system.

The control signals are sent from the smart meter gateway to the inverter via LAN interface. For this to work, the EEBus protocol must be activated in the inverter and the EEBus counterpart must be trusted. The counterpart is usually the smart meter gateway, which acts as the EEBus interface.

Connect smart meter communication cable

DANGER

Risk of death due to electrical shock and discharge!

- De-energise device and secure against being switched on again.

1. Mount the smart meter gateway in the control cabinet or power distributor and connect with the energy meter.
2. Connect the LAN cable correctly from the smart meter gateway to a router in accordance with the manufacturer's connection plan or connect it directly to the inverter.

✓ The smart meter gateway is connected to the inverter.

Activating EEBus in the inverter.

The EEBus protocol must be activated in the inverter.

1. Call up the inverter's Webserver.
2. Log in to the Webserver as the plant owner or installer.
3. Select the menu item ***Settings*** > ***EEBus***
4. Activate EEBus.
5. Under ***Available devices***, select the EEBus device, e.g. the control box or smart meter.

© 2024 KOSTAL Solar Electric GmbH

6. Now trust the device in the new window that opens.

➔ The counterpart must now also trust the inverter so that the inverter can be controlled via EEBus protocol.

✓ EEBus activated. The inverter can now be controlled by the energy supplier using the EEBus protocol. No further settings are required in the inverter.

© 2024 KOSTAL Solar Electric GmbH

14. External battery control

14.1 External battery control 226
14.2 External battery control via Modbus (TCP) 227
14.3 External battery control via digital inputs 229

© 2024 KOSTAL Solar Electric GmbH

14.1 External battery control

With external battery control, an external market operator, e.g. an energy supply company, controls the charge/discharge of the battery using an external energy management system.

For example, the energy of the battery can be fed into the public grid as required or charged from the public grid to stabilise it. The battery energy can also be used in the internal house grid.

Information about the configuration of the external control can be obtained from the relevant service provider (e.g. energy supply company).

The advantage for plant owners is that they receive remuneration from the external supplier for the energy provided, for example.

External battery control can be activated and configured in the Webserver in the Service menu under "Battery settings".

The following control interfaces are available:

- External battery control via Modbus (TCP) **External battery control via Modbus (TCP), Page 227**
- External battery control via digital inputs **External battery control via digital inputs, Page 229**

© 2024 KOSTAL Solar Electric GmbH

14.2 External battery control via Modbus (TCP)

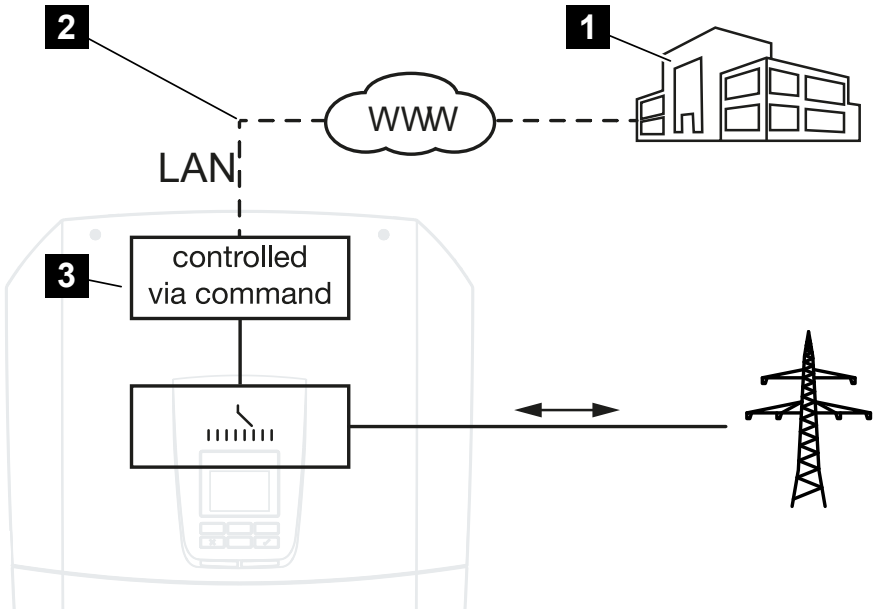

1 External energy management system (e.g. energy supply company)
2 Control via Modbus (TCP)
3 Control electronics of the inverter

If external battery control via Modbus (TCP) is selected, the inverter receives the control signals for charging and discharging the connected battery via Modbus (TCP).

For this purpose, the inverter must be connected to the Internet via Ethernet (LAN).

The internal energy management remains active, but is overridden by the external specifications regarding charging and discharging capacity.

The following commands are possible:

- Charging/discharging of battery via current specified as a percentage or in watts
- Charging/discharging of battery via output specified as a percentage or in watts
- Range specification of a min./max. SoC as percentage

If no external control signals are received for an extended period of time, the inverter returns to internal battery control. The time for this is set in the Webserver. The specifications of the external provider must be observed.

Activate external battery control via Modbus (TCP)

The inverter must be connected to the local LAN network.

© 2024 KOSTAL Solar Electric GmbH

1. Launch an Internet browser on the computer.
2. Call up the inverter's Webserver.
   To do this, enter the IP address of the inverter in the address bar of the web browser and confirm with ***ENTER***. The IP address can be read off from the inverter's display

➔ The Webserver page is opened.

3. Log in to the Webserver as an ***installer***.
4. Select the ***Service menu*** > ***Battery settings*** menu item.

➔ The ***Battery settings*** page opens.

5. Under ***Battery control*** select the ***External via protocol (Modbus TCP)*** function.
6. Click on the ***Save*** button.

✓ The function is active.

© 2024 KOSTAL Solar Electric GmbH

14.3 External battery control via digital inputs

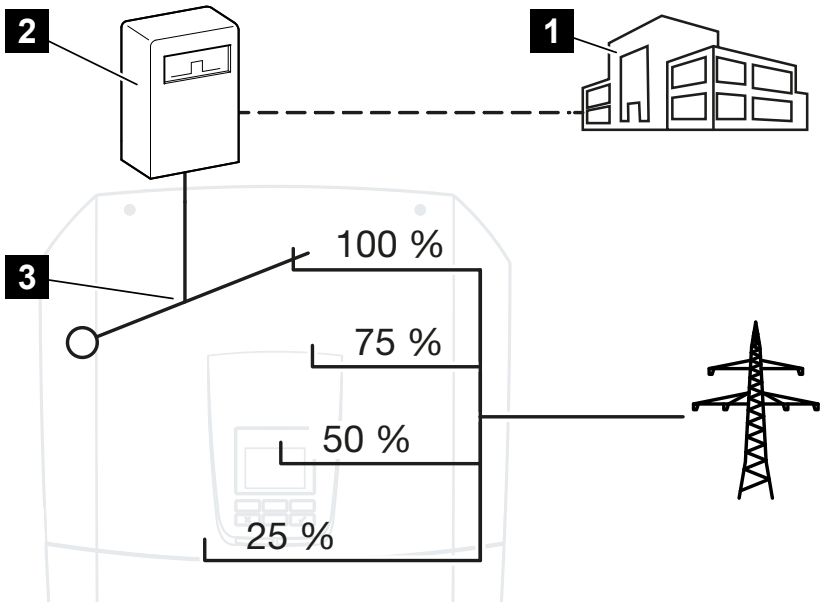

1 External energy management system (e.g. energy supply company)
2 External control box
3 Inverter control electronics

If ***External battery control via digital inputs*** is selected, the inverter receives the control signals for charging and discharging the connected battery via the digital inputs of the Smart Communication Board (SCB).

It is important that the digital inputs in the Webserver are configured accordingly.

Internal energy management remains active, but is overridden by the external specifications for charging and discharging capacity.

The following commands are possible:

- Charging/discharging of battery via output specified as a percentage

The specifications of the external provider must be observed.

Activating external battery control via digital inputs

1. Connect inverter and computer. **Connecting methods between inverter/computer, Page 195**
2. Launch an Internet browser.

© 2024 KOSTAL Solar Electric GmbH

3. Call up the Webserver. To do this, enter the IP address of the inverter to which the control box is connected in the browser's address bar and confirm with ***ENTER***.

INFO

The IP address can be read on the inverter's display.

➔ The Webserver page is opened.

4. Log in to the Webserver as an ***installer***.
5. Select the ***Service menu*** > ***Battery settings*** menu item.

➔ The ***Battery settings*** page opens.

6. Under ***Battery control*** select the ***External via digital I/O*** function.
7. Click on the ***Save*** button.

✓ The function is active.

Configuration of digital inputs

1. Go to ***Service menu*** > ***Digital inputs***.
2. The ***Digital inputs*** page opens.
3. Under Operating mode select the ***External battery management*** function.
4. Click on the ***Save*** button.

✓ The function is active.

© 2024 KOSTAL Solar Electric GmbH

15. Backup mode

15.1 Backup mode with the KOSTAL BackUp Switch 232
15.2 Backup mode with an automatic backup box 234
15.3 Limitations in backup mode 236

© 2024 KOSTAL Solar Electric GmbH

15.1 Backup mode with the KOSTAL BackUp Switch

The KOSTAL BackUp Switch is a manual switch from KOSTAL. The steps described here relate specifically to this type.

If another backup box has been fitted, consult the manufacturer's instructions to find out how it is operated.

The backup function must be activated during initial commissioning or by changing the operating mode in the inverter. Depending on the hardware installed, you can choose between the manual KOSTAL BackUp Switch and an automatic backup box. This setting can only be configured by an installer.

Procedure using the KOSTAL Backup Switch if there is a grid failure

1. As soon as the public grid fails, you will receive an event message on the inverter.

➔ Inverter display message:
The public grid has failed. Please change over to backup mode.

➔ The red LED on the inverter lights up for a fault.

➔ The following event messages are displayed on the status line:
- 6021 (The public grid has failed. The inverter is ready to start backup mode.)
- 6006 (Sensor information cannot be retrieved)

2. Change over to backup mode (house) on the **KOSTAL Backup Switch**.

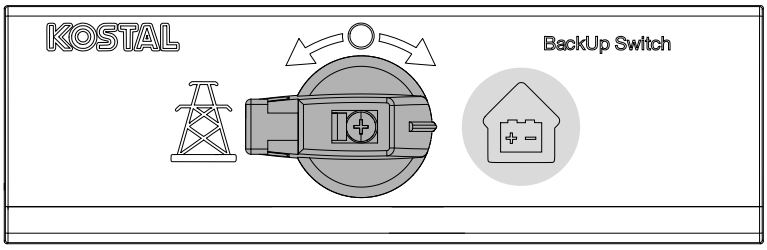

➔ The inverter establishes a backup power network. It takes max. 5 seconds for the backup mode to start.

➔ The red and green LEDs light up on the inverter.

➔ The following event message is displayed on the status line:
Backup mode.

✓ Backup mode active.

© 2024 KOSTAL Solar Electric GmbH

What are the required steps if the inverter shuts down when there is an overload?

If there is an overload, the inverter tries to establish a backup power network three times before it shuts down.

The inverter display then shows a message that the load should be reduced.

1. Shut down consumers in the house grid to reduce the load.
2. Acknowledge the message on the display.

➔ The inverter now tries to establish a backup power network again.

If it is still not possible to establish a backup power network, reduce the consumers further.

Do not switch the inverter off in backup mode if PV energy is no longer available. The inverter cannot establish a connection to the battery if it has been switched off because there are only a few battery types (e.g. BYD) that supply the inverter's communication board with energy.

Procedure using the KOSTAL Backup Switch when the grid returns

The KOSTAL Smart Energy Meter measures the grid parameters for the public grid at the grid connection point. As soon as the grid is available again, the KOSTAL Smart Energy Meter forwards this information to the inverter.

1. As soon as the public grid is available again, you will receive an event message on the inverter display.

➔ The red LED on the inverter goes off.

➔ After approx. 60 seconds, the following message appears on the inverter display: ***The public grid is available again. Please switch to grid mode.***

2. Change over to grid mode (power pylon) on the **KOSTAL Backup Switch**.

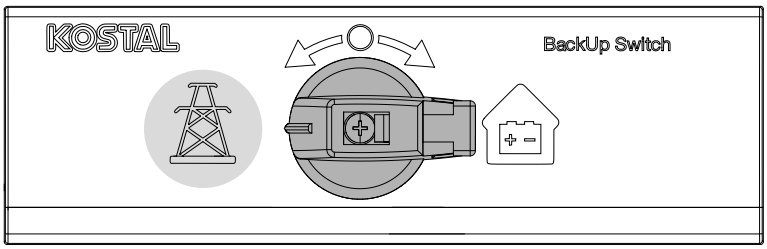

➔ All consumers are immediately connected to the public grid again and can be used.

➔ The inverter starts up again after approx. 90 seconds, depending on the grid guidelines, and can feed in to the public grid again.

➔ The green LED lights up on the inverter.

✓ Grid mode is active again.

© 2024 KOSTAL Solar Electric GmbH

15.2 Backup mode with an automatic backup box

A backup box changes over automatically if there is a grid failure and disconnects the public grid from the house grid. Generally, the user does not need to do anything to switch from grid mode to backup mode and vice versa. The changeover is fully automatic in both directions.

The steps described here may differ depending on the backup box fitted. Further information on your backup box can be found in the manufacturer's instructions.

The backup function must be activated during initial commissioning or by changing the operating mode in the inverter. Depending on the hardware installed, you can choose between a manual and an automatic backup box. This setting can only be configured by an installer.

Procedure using an automatic backup box if there is a grid failure

1. As soon as the public grid fails, you will receive an event message on the inverter.

➔ The red LED on the inverter lights up for a fault.

➔ The following event messages are displayed on the status line:
- 6021 (The public grid has failed. The inverter is ready to start backup mode.)
- 6006 (Sensor information cannot be retrieved)

➔ After a wait time of approx. 30 seconds, the inverter sends a switching signal to the backup box to disconnect the house grid from the public grid.

➔ The inverter then establishes a backup power network and switches to backup mode.

➔ The red and green LEDs light up on the inverter.

➔ The following event message is displayed on the status line:
Backup mode.

✓ Backup mode active.

What are the required steps if the inverter shuts down when there is an overload?

If there is an overload, the inverter tries to establish a backup power network three times before it shuts down.

The inverter display then shows a message that the load should be reduced.

1. Shut down consumers in the house grid to reduce the load.
2. Acknowledge the message on the display.

➔ The inverter now tries to establish a backup power network again.

If it is still not possible to establish a backup power network, reduce the consumers further.

© 2024 KOSTAL Solar Electric GmbH

Do not switch the inverter off in backup mode if PV energy is no longer available. The inverter cannot establish a connection to the battery if it has been switched off because there are only a few battery types (e.g. BYD) that supply the inverter's communication board with energy.

Procedure using an automatic backup box when the grid returns

The KOSTAL Smart Energy Meter measures the grid parameters for the public grid at the grid connection point. As soon as the grid is available again, the KOSTAL Smart Energy Meter forwards this information to the inverter.

1. As soon as the public grid is available again, you will receive an event message on the inverter display.

➔ The red LED on the inverter goes off.

➔ After a wait time of approx. 60 seconds, the inverter sends a switching signal to the backup box to reconnect the public grid.

➔ The backup box changes over to grid mode.

➔ All consumers are immediately connected to the public grid again and can be used.

➔ The inverter starts up again after approx. 90 seconds, depending on the grid guidelines, and can feed in to the public grid again.

➔ The green LED lights up on the inverter.

✓ Grid mode is active again.

© 2024 KOSTAL Solar Electric GmbH

15.3 Limitations in backup mode

The inverter is a hybrid inverter that is designed for optimal use in parallel grid operation.

If there is a grid failure, the inverter can establish its own 3-phase backup power network using an emergency generation mode, also called backup mode.

The inverter is not designed to be used permanently as a microgrid inverter. The maximum number of operating hours in backup mode is **5000** hours. The warranty for the device then expires because the load in backup mode is higher than in grid mode.

Consumers in backup mode

Be aware that not all consumers in the house grid can be supplied with energy, because the power from the battery and PV modules is not sufficient at all times. Therefore, in backup mode, it makes sense to only supply certain consumers with energy.

Compatible backup switches make it possible to divide up the supply to the house. All consumers that are not required during a grid failure are connected to the grid mode branch. Consumers that should continue to be supplied during backup mode go in the backup mode branch.

If an overload occurs in the house grid because there are too many consumers in backup mode or when a backup power network is being established, the inverter tries to establish a backup power network three times before shutting down. A message on the inverter display indicates that this has happened. If this occurs, reduce the consumers and acknowledge the message on the inverter display. The inverter then tries to establish a backup power network again.

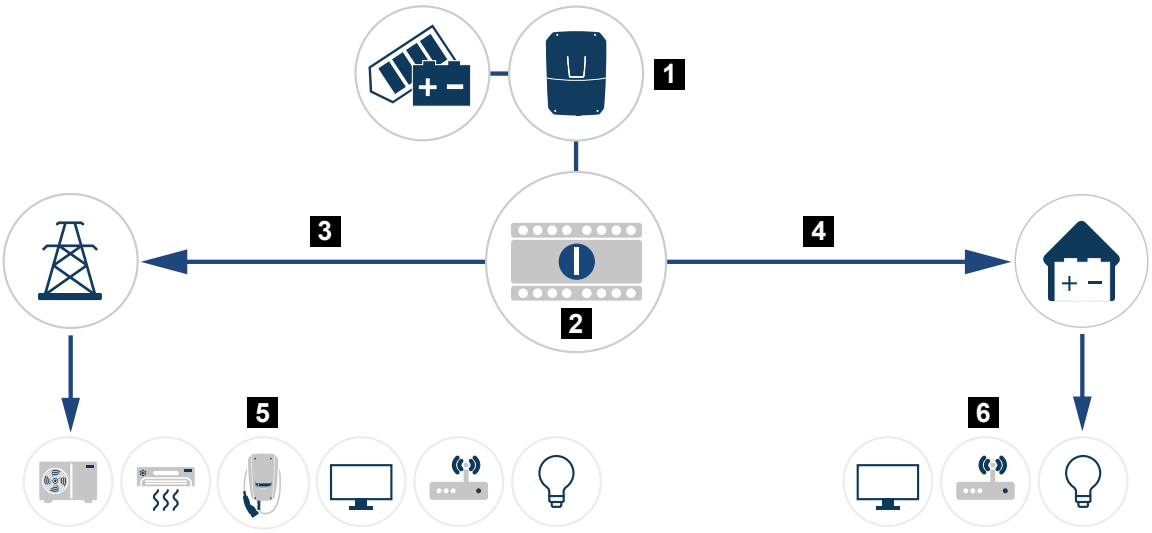

1 PLENTICORE G3

2 KOSTAL BackUp Switch (manual switch)

3 Mains operation

© 2024 KOSTAL Solar Electric GmbH

4 Backup mode
5 Consumers in grid mode
6 Consumers in backup mode

Be aware of the following points:

- The power in backup mode depends on the installed PV power and the available battery power.
- It is not possible to use all consumers in backup mode.
- For reliable operation, do not connect any consumers that rely on having a stable energy supply.
- Do not connect any consumers that have a larger total usage than the maximum backup power.
- Do not connect any consumers that can cause very high startup currents. In backup mode, some electrical devices may not function correctly due to the starting currents being too high. In backup mode, only connect consumers that are absolutely necessary.
- The inverter only switches to backup mode when the conditions are met. This means that the consumers must not exceed the power limits available in backup mode. In this case, reduce the consumption (shut down consumers) so that the inverter can switch to backup mode.
- Self-consumption control using switched outputs does not work in backup mode. Only switched outputs for events can be used.
- Do not switch the inverter off in backup mode if PV power is no longer available. The inverter cannot establish a connection to the battery if it has been switched off because there are only a few battery types (e.g. BYD) that supply the inverter's communication board with energy. Backup mode is only continued once there is sufficient PV power available again.
- If there is no longer any PV or battery power available, the inverter shuts down. Backup mode is only continued automatically once there is sufficient PV power available again.
- The backup mode function must be activated in the inverter's Webserver.

© 2024 KOSTAL Solar Electric GmbH

16. System monitoring

16.1 The log data 239
16.2 Retrieving, storing and graphically depicting log data 240
16.3 The KOSTAL Solar Portal 242

© 2024 KOSTAL Solar Electric GmbH

16.1 The log data

The inverter is equipped with a data logger, which regularly records the following data from the system:

- Inverter data
- External energy meter data
- Grid data
- ENS data

For information on how to retrieve, store and graphically display log data, see **Retrieving, storing and graphically depicting log data, Page 240**.

The log data can be used for the following purposes:

- Check operating characteristics of the system
- Determine and analyse errors
- Download and graphically depict yield data

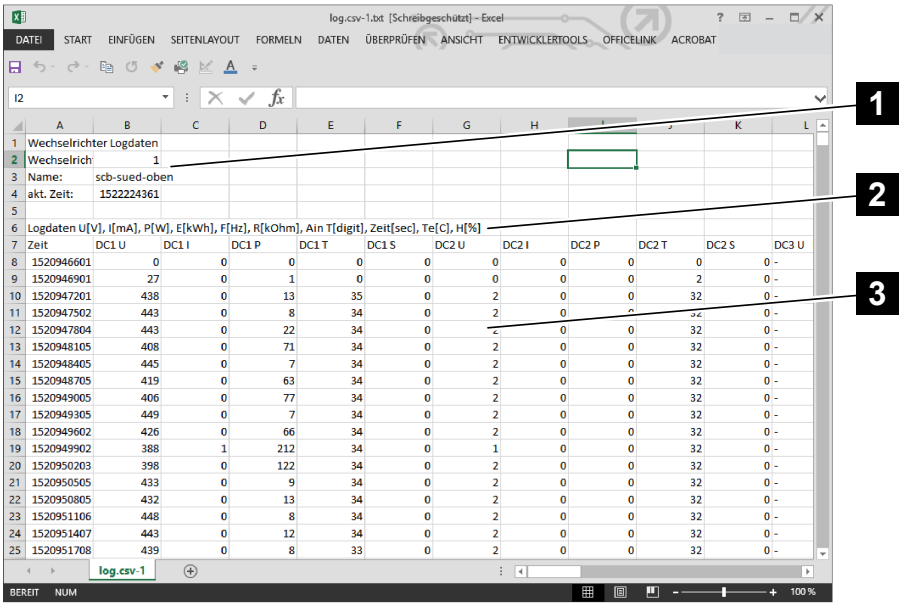

1 File header
2 Physical variables
3 Log file entries

© 2024 KOSTAL Solar Electric GmbH

16.2 Retrieving, storing and graphically depicting log data

There are several options for retrieving and permanently storing the log data:

Option 1: Download the log data with a computer

1. In the Webserver, go to ***Log data***.
2. Select time period (max. 100 days) and confirm with ***Download***.

✓ The log data (logdata.csv) can be saved onto a computer and displayed and further processed with any common spreadsheet program (e.g. Excel).

Option 2: Transfer log data to an external FTP server

1. In the Webserver, go to ***Settings > Solar Portal***.
2. Activate the item ***Log data export with FTP push*** and enter the necessary external server data.

✓ The log data are transferred in the interval to the external FTP server and can be displayed and processed further with any common spreadsheet program (e.g. Excel).

Option 3: Transfer log data to a solar portal and display it

With a solar portal it is possible to monitor the PV system and performance data via the Internet.

A solar portal has the following functions, which, however, may differ depending upon the portal:

- Graphic depiction of performance data
- Worldwide online access to the portal
- Email notification of errors
- Data export (e.g. Excel file)
- Long-term storage of log data

Prerequisites for data transfer to a solar portal:

- Device has Internet connection
- Registration with a solar portal (e.g. KOSTAL Solar Portal)

© 2024 KOSTAL Solar Electric GmbH

- Selection of a solar portal
- Activation of data transfer in the inverter

Activation of data transfer to a solar portal via the control panel

INFO

A correctly set-up network connection/Internet connection is a prerequisite for data transfer.

It may take as much as 20 minutes following activation (dependent upon the portal) until the data export is visible on the solar portal KOSTAL Solar Portal.

The KOSTAL Solar Portal is preset as the standard solar portal.

1. On the inverter control panel, select the ***Settings/Information*** menu.
2. Confirm with the ***ENTER*** key.
3. Use the ***UP***, ***DOWN*** and ***ENTER*** keys to select the menu ***Solar Portal*** > ***Portal***.
4. Select a solar portal.
5. Press and hold down the ***ENTER*** key.
6. Select the ***Activate*** field and confirm with ***ENTER***.

✓ Data transfer to the solar portal is now enabled. The name of the solar portal is displayed. The data export to the solar portal is being executed.

© 2024 KOSTAL Solar Electric GmbH

16.3 The KOSTAL Solar Portal

The solar portal of KOSTAL Solar Electric GmbH is a free Internet platform for monitoring the PV system.

The inverter sends the PV system's yield data and event messages to the solar portal via the internet.

The information is then stored in the solar portal. You can view and call up this information via the Internet.

Prerequisites for using the solar portal

- The inverter must have a connection to the Internet.
- The inverter must not yet be logged onto the solar portal.
- The inverter must not yet be assigned to a plant.

To use the solar portal, follow these two steps:

- Activate data transfer to the solar portal in the inverter. Activation can be performed using the Webserver or the inverter menu.

INFO

If there are multiple inverters in a system, data transfer to the KOSTAL Solar Portal must be set up separately for each inverter and, if necessary, for the KOSTAL Smart Energy Meter.

- Register for free via the KOSTAL Solar Terminal on the KOSTAL Solar Electric GmbH website.

© 2024 KOSTAL Solar Electric GmbH

17. Switching the inverter on and off

17.1 Switching on the inverter 244
17.2 Switching off the inverter 245
17.3 De-energising the inverter 246
17.4 When working on the DC feed cables 247

© 2024 KOSTAL Solar Electric GmbH

17.1 Switching on the inverter

1. Activate supply voltage via the line circuit breaker.
2. If present, switch on the battery storage unit using the battery switch. For more information about operation, refer to the operating manual for the battery storage system.

➔ The battery storage unit starts up.

3. If external DC voltage separators are present, activate the DC strings consecutively.
4. Move the DC switch on the inverter to the ON position.

➔ The inverter starts up.

➔ During start-up, the LEDs in the control panel of the inverter light up briefly.

➔ The screensaver appears on the display and shows the device type. The screensaver is deactivated when a key is pressed twice.
When no key has been pressed for several minutes, the screensaver with the image of the inverter appears automatically on the display.

✓ The inverter is in operation.

© 2024 KOSTAL Solar Electric GmbH

17.2 Switching off the inverter

To interrupt the inverter's feed-in to the public grid, proceed as follows.

Additional steps are necessary for repair work on the inverter. For this, the entire inverter must be made voltage-free.

1. Turn the DC switch on the inverter to OFF.
2. If external DC voltage separators are present, switch off the DC strings consecutively.
3. If a battery is connected, switch off the battery storage. A detailed description of how to switch off the battery storage is available in the operating manual provided by the battery manufacturer.

✓ The inverter no longer feeds into the public grid. The inverter remains energised and monitoring is still performed.

© 2024 KOSTAL Solar Electric GmbH

17.3 De-energising the inverter

When working in the inverter's terminal compartment, this area must be de-energised.

1. Turn the DC switch on the inverter to OFF.
2. If used, switch off the power supply for the switched outputs.
3. If external DC voltage separators are present, switch off the DC strings consecutively.
4. If a battery is connected, switch off the battery storage. A detailed description of how to switch off the battery storage is available in the operating manual provided by the battery manufacturer.
5. Switch off the AC line circuit breaker.
6. Secure the entire voltage supply against being restarted.

✓ The inverter’s terminal compartment is now voltage-free.

DANGER

Risk of death due to electrical shock and discharge!

When working on the DC feed cables (PV or battery), these must be disconnected from the inverter. Touching live parts or cables will result in death or life-threatening injuries from electrical shock.

© 2024 KOSTAL Solar Electric GmbH

17.4 When working on the DC feed cables

DANGER

Risk of death due to electrical shock and discharge

During operation, high voltages are present on the live parts and cables inside the product. Touching live parts or cables will result in death or life-threatening injuries from electrical shock.

When working on the DC feed cables, the inverter must be made completely voltage-free and the DC feed cable must be removed.

Perform these steps to do so:

1. Turn the DC switch on the inverter to OFF.
2. If used, switch off the power supply for the self-consumption output.
3. If used, switch off the power supply for the switched outputs.
4. If external DC voltage separators are present, switch off the DC strings consecutively.
5. If a battery is connected, switch off the battery storage. A detailed description of how to switch off the battery storage is available in the operating manual provided by the battery manufacturer.
6. Switch off the AC line circuit breaker.
7. Secure the entire voltage supply against being restarted.
8. Disconnect all DC connections on the inverter. To do this, unlock the engaging clips with a screwdriver and disconnect the plug.

INFO

Information on the SUNCLIX mounting instructions can be found at: **www.phoenixcontact.com**.

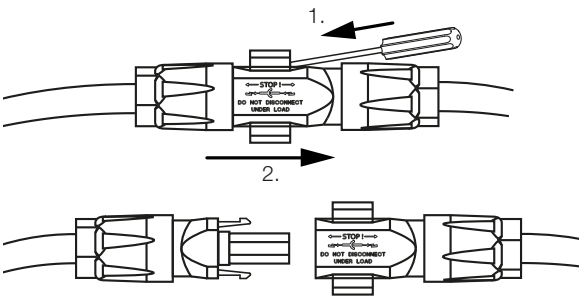

9. Ensure that all connections are voltage-free.

✓ The inverter is now completely voltage-free.

© 2024 KOSTAL Solar Electric GmbH

Work on the inverter can now be carried out.

Use insulated tools when working on the DC feed cables because they may be live.

© 2024 KOSTAL Solar Electric GmbH

18. Maintenance

18.1 Maintenance and cleaning 250
18.2 Housing cleaning 251
18.3 Cleaning the fans 252
18.4 Updating software 254
18.4.1 Update methods 255
18.4.2 Perform manual update 256
18.5 Event codes 257

© 2024 KOSTAL Solar Electric GmbH

18.1 Maintenance and cleaning

Once correctly installed, the inverter runs virtually maintenance-free.

The following maintenance tasks are to be carried out for the inverter:

Activity	Interval
Check cable connections and plugs	1x annually
Clean fans, see Fan cleaning. Then carry out a fan test. The fan test can be started by going to ***Service menu > Fan test***.	1x annually

POSSIBLE DAMAGE

Dirty or blocked fans mean that the inverter is not adequately cooled. Insufficient cooling of the inverter may result in power reduction or the failure of the system.

Always mount inverters in such a way that falling parts cannot fall into the inverter through the ventilation grille.

If no maintenance work is carried out, this will result in exclusion of the warranty (see 'Exclusion of warranty' in our service and warranty conditions).

© 2024 KOSTAL Solar Electric GmbH

18.2 Housing cleaning

The housing may only be wiped down with a damp cloth. Abrasive cleaners are not permitted.

© 2024 KOSTAL Solar Electric GmbH

18.3 Cleaning the fans

The fan may only be removed and cleaned if the inverter is switched off. Otherwise, the fan may start up.

1. Turn the DC switch on the inverter to OFF.
2. Remove the fan. To do this, place a screwdriver at the edge of the fan grille and apply a little pressure to the fan grille.

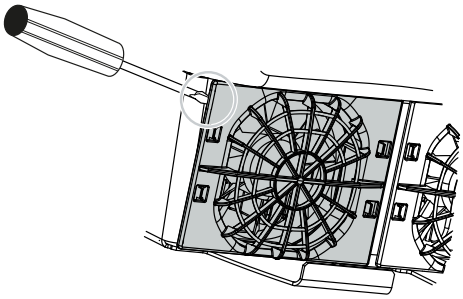

3. With a second screwdriver, press the fastening straps toward the centre of the fan. Pull the fan unit slightly forward.

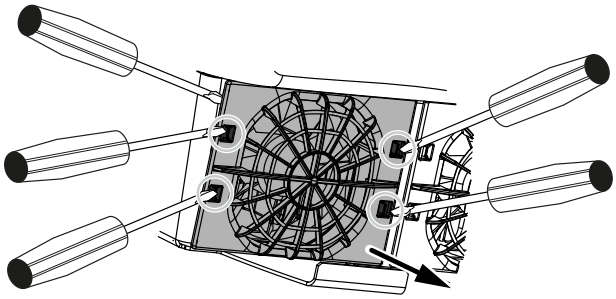

4. Completely remove the fan unit from the housing. To do this, disconnect the plug of the fan cable.

INFO

Note how the cable is routed inside the housing. When installing the fan, the fan cable must be relaid in exactly the same way.

5. The fan can also be pulled off the fan grille. To do this, press the fastening straps slightly outward and pull off the fan.

© 2024 KOSTAL Solar Electric GmbH

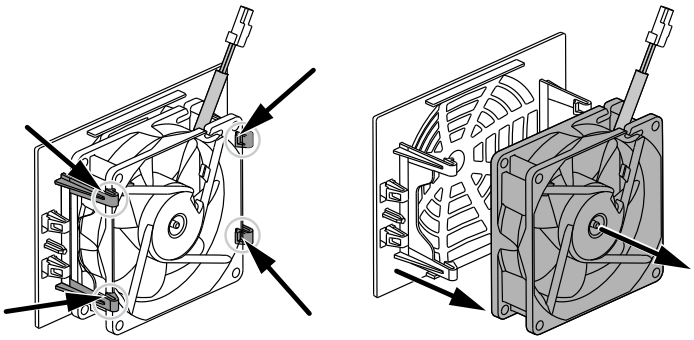

6. Clean fan and housing opening with a soft brush.
7. Note the following when installing the fan:
   - The fan has been correctly installed in the fan frame (air flow direction).
   - The cable points into the housing.
   - The cable of the fan is not pinched.

INFO

When installing the fan ensure that the cables are laid so that they do not run into the fan. If this is not done, the fan may fail or noise may result.

8. Reconnect the fan cable and insert the fan into the housing. When switching on for the first time, check whether the air from the fan is drawn inwards.
9. Switch the inverter back on again.

✓ The fan has been cleaned.

© 2024 KOSTAL Solar Electric GmbH

18.4 Updating software

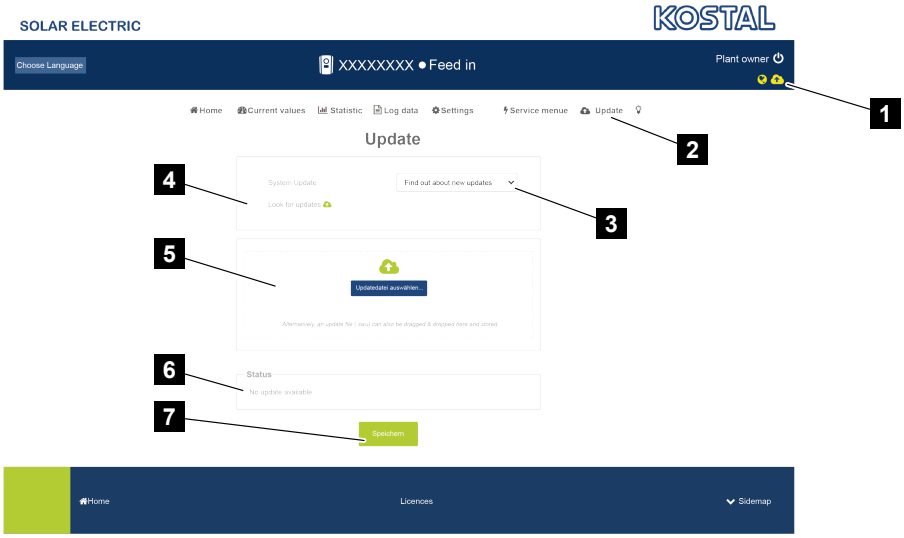

1 Yellow software update icon: An update is available

2 Call up the update menu

3 Configure update method: Manual updates, Notify about available updates or Automatic updates

4 Check for updates on the Internet

5 Manual installation via local update file

6 Status line

7 Save settings or perform software update

If new software is available for the inverter, it can be updated via the ***Update*** menu item on the inverter. In the process, the software and the user interface of the Smart Communication Board are brought completely up to date.

© 2024 KOSTAL Solar Electric GmbH

18.4.1 Update methods

If a software update is available, the software can be updated on the inverter using three methods.

Under ***Update*** > ***System Update*** you can choose between these three update methods. The selection must then be confirmed using the ***Save*** button.

Manual updates

The inverter is updated manually. Information on this can be found under "Performing a manual update".

Notify about available updates
(Inverter must be connected to the Internet.)

The inverter checks at regular intervals whether a software update is available. The cloud symbol on the header line tells you whether this is the case.



- Yellow: A software update is available.
- Grey: No software update is available.

The update of the inverter can be started in the ***Update*** menu via the ***Execute*** button.

Automatic updates (recommended)
(Inverter must be connected to the Internet.)

If this is selected, a new software update is installed on the inverter as soon as it is available.

© 2024 KOSTAL Solar Electric GmbH

18.4.2 Perform manual update

Updating the inverter using the Webserver is a very simple process.

1. Call up the Webserver, see Accessing the Webserver.
2. Go to ***Update***.
3. If the inverter is connected to the Internet, use the ***Look for updates***function.
   If the inverter has no connection to the Internet, download the update for the inverter from the manufacturer's website to your computer. Click on the ***Select upload file*** button and select the update file (*.swu) on the computer or drag the update file into the field.

INFO

You can find the latest update in the download area for the product on our website at **www.kostal-solar-electric.com**

4. Start the installation using ***Execute***.

➔ The inverter recognises the update file and starts the installation.

5. If you want to install the software update, confirm with ***OK***.

➔ The software update is installed on the inverter. Once the software update has been installed, the inverter is restarted. It can take up to 10 minutes for the inverter to re-start. Following the update, the installer's display shows that the installation has been successful.

INFO

Following a successful software update, the inverter automatically returns to feed-in mode.

6. Once the software update has been successfully installed, the current software version can be queried on the inverter or Webserver.
   This is done in the inverter's menu by going to: ***Settings/information*** > ***Device information*** or in the Webserver by going to ***Info***.

✓ The update has been installed.

© 2024 KOSTAL Solar Electric GmbH

18.5 Event codes

There is no need to take action when an event occurs occasionally or only briefly and the device resumes operation afterwards. If an event persists or recurs frequently, the cause must be determined and rectified.

A list of the current event codes and measures can be found in the document **Ereignisliste/Event list**, which can be found in the **download area** for your product.

© 2024 KOSTAL Solar Electric GmbH

19. Technical information

19.1 Technical data 259
19.2 Block diagram 263

© 2024 KOSTAL Solar Electric GmbH

19.1 Technical data

Subject to technical changes. Errors excepted.
You can find current information at **www.kostal-solar-electric.com**.

Power class

PLENTICORE G3	Unit	S			M			L		
Basic power	kW	4.0	-	-	8.5	-	-	15	-	-
Optional power extension level 1	kW	-	5.5	-	-	10	-	-	17.5	-
Optional power extension level 2	kW	-	-	7.0	-	-	12.5	-	-	20

Input side (DC)

PLENTICORE G3	Unit	S			M			L		
Max. PV power (cos ϕ = 1)	kWp	6	8.25	10.25	12.75	15	18.75	22.5	26.5	30
Max. PV power per DC input	kWp		8.25			10.5			18	
Nominal DC power	kW	4.08	5.61	7.14	8.67	10.2	12.75	15.3	17.85	20.4
Rated input voltage (Udc,r)	V					680				
Start input voltage (Udc,start)	V					95				
Max. system voltage (Udc,max)	V					1000				
MPP range at rated output (Umpp,min)	V	80	110	140	170	200	250	170	198	227
MPP range at rated output (Umpp,max)	V					800				
Operating voltage range (Udc,workmin)	V					75				
Operating voltage range (Udc,workmax)	V					900				
Max. input current (Idc,max) DC1/DC2 input	A				17				30	
Max. input current (Idc,max) DC3 input	A		17				30			
Max. PV short-circuit current (ISC_PV) DC1/DC2 input	A				23.8				42	
Max. PV short-circuit current (ISC_PV) DC3 input	A		23.8				42			
Number of DC inputs						3				
Number of combined DC inputs (PV or battery)						1				
Number of independent MPP trackers						3				

Input side (DC3 battery input)

PLENTICORE G3	Unit	S			M			L		
Battery input min. working voltage range (Udc,workbatmin)	V					95				
Battery input max. working voltage range (Udc,workbatmax)	V					650				
Battery input max. charge/discharge current	A		17/17				30/30			

© 2024 KOSTAL Solar Electric GmbH

PLENTICORE G3	Unit	S	M	L
Max. BAT power per DC input	kW	8.25	10.5	18

Output side (AC)

PLENTICORE G3	Unit	S			M			L		
Rated power, cos ϕ = 1 (Pac,r)	kW	4.0	5.5	7.0	8.5	10	12.5	15	17.5	20
Output apparent power (Sac,nom, Sac,max)	kVA	4.0/4.0	5.5/5.5	7.0/7.0	8.5/8.5	10/10	12.5/12.5	15/15	17.5/17.5	20/20
Min. output voltage (Uac,min)	V	320								
Max. output voltage (Uac,max)	V	460								
Rated alternating current (Iac,r)	A	5.8	7.9	10.1	12.3	14.4	18.0	21.7	25.3	28.9
Max. output current (Iac,max)	A	11.2			20			32		
Short-circuit current (peak/RMS)	A	9.1/6.4	12.4/8.8	15.9/11.3	19.2/13.6	22.6/16.0	28.2/20.0	34.1/24.1	39.6/28.1	45.4/32.1
Grid connection		3N~, 230/400 V, 50 Hz								
Rated frequency (fr)	Hz	50								
Grid frequency (fmin - fmax)	Hz	47/52.5								
Setting range for the power factor (cos ϕAC,r)		0.8...1 (ind./cap.)								
Power factor at rated power (cos ϕAC,r)		1								
THD	%	3								
Standby	W	3.5								

Backup mode

PLENTICORE G3	Unit	S	M	L
Backup power mode		3N~, 230/400 V, 51 Hz		
Nominal apparent power in backup mode	kVA	7.0	12.5	20
Nominal power per phase	kW	2.33	4.16	6.66
cos ϕ range		0…1		
Start-up apparent power for min. 5 sec at Uac,r	kVA	7.7	13.8	22.1
Max. current per phase	A	11.2	20	32
Start time with manual KOSTAL BackUp Switch	s	<5		
Start time with automatic backup box	s	<30		
Operating hours in backup mode	h	5000		

Efficiency

PLENTICORE G3	Unit	S	M	L
Max. efficiency	%	98.03	98.05	98.1
European efficiency	%	97.14	97.21	97.37
MPP adjustment efficiency	%	99.9		

© 2024 KOSTAL Solar Electric GmbH

System data

PLENTICORE G3	Unit	S	M	L
Topology: Without galvanic isolation – transformerless		Yes		
Protection class in accordance with IEC 60529		IP65		
Protective class according to IEC 62103		I		
Overvoltage category according to IEC 60664-1 on input side (PV generator)		II		
Overvoltage category according to IEC 60664-1 on output side (grid connection)		III		
DC overvoltage protection module type 2 - can be retrofitted		Yes		
Pollution degree		4		
Environmental category (outdoor installation)		Yes		
Environmental category (indoor installation)		Yes		
UV resistance		Yes		
AC cable diameter (min-max)	mm	10…28		
AC cable cross-section (min-max)	mm^2	2.5…10	4…10	6…10
DC cable cross-section (PV/BAT) (min-max)	mm^2	2,5...6 / 4...6	2,5...6 / 6	4...6 / 6
Max. fuse protection on output side (AC) IEC 60898-1	A	B16/C16	B25/C25	B32/C32
Internal operator protection in accordance with EN 62109-2		Yes		
Independent disconnection device according to VDE V 0126-1-1		Yes		
Mechanical DC circuit switch as per IEC 60947-3		ja		
Height/width/depth	mm	561/409/237		
Weight	kg	21.8	22.3	24.3
Cooling principle – regulated fans		Yes		
Max. air throughput	m^3/h	184		
Noise emission (typical)	dB(A)	39		
Ambient temperature	°C	-20…60		
Max. operating altitude above sea level	m	2000		
Relative humidity	%	4…100		
Connection technology, DC side		SUNCLIX plug		
Connection technology, AC side		Spring-type terminal strip		
Connection technology, COM		Push-in terminals		

Noise emission: Measured under rated output at an ambient temperature of 23 °C. If a string connection is unfavourable or there is a higher ambient temperature, the noise emission may be up to 48 dB(A).

Overvoltage category II (DC input): The device is suitable for connection to PV strings. Long feed cables out of doors or a lightning protection system in the vicinity of the PV system may make lightning protection or surge protection equipment necessary.

© 2024 KOSTAL Solar Electric GmbH

Overvoltage category III (AC output): The device is suitable for permanent connection in the grid distribution behind the meter and the line protection fuse. If the connection cable travels outdoors over long distances, overvoltage protection devices may be necessary.

Degree of contamination 4: Contamination results in continuous conductivity, e.g. due to conductive dust, rain or snow; indoors or outdoors.

Interfaces

PLENTICORE G3	Unit	S	M	L
Ethernet LAN (RJ45)/Wi-Fi (2.4 GHz [IEEE 802.11 b/g/n])		2 / yes		
Energy meter connection for collecting energy data (Modbus RTU)		Yes		
Connection of external switching device (backup)		Yes		
Digital inputs		Ripple control receiver or external battery control, CEI, OVP evaluation		
Digital outputs		4 (24 V, 100 mA)		
Webserver (user interface)		Yes		

Warranty

PLENTICORE G3	Unit	S	M	L
Warranty (Smart Warranty/Smart Warranty plus)	Years	10 (5 + 5)		

Warranty (Smart Warranty): Activate your free warranty (Smart Warranty) now in the KOSTAL Solar online shop (shop.kostal-solar-electric.com). For the Smart Warranty Plus, you must also register your device in our KOSTAL Solar Portal. This does not affect your statutory warranty. You will find more information about the service and warranty conditions in the download area for your product.

Directives / Certification

PLENTICORE G3	Directives / Certification
PLENTICORE G3 S	CE, GS, CEI 0-21, C10/11, EN 62109-1, EN 62109-2, EN 60529, EN 50438, EN 50549-1, NA/EEA, G98, G99, EIFS2018, IEC 61727, IEC 62116, RD 1699, RD 647, RFG, TOR generators, UNE 206006, UNE 206007-1, VDE 0126-1-1, VDE-AR-N 4105, VJV2018
PLENTICORE G3 M	CE, GS, CEI 0-21, C10/11, EN 62109-1, EN 62109-2, EN 60529, EN 50438, EN 50549-1, NA/EEA, G98, G99, EIFS2018, IEC 61727, IEC 62116, RD 1699, RD 647, RFG, TOR generators, UNE 206006, UNE 206007-1, VDE 0126-1-1, VDE-AR-N 4105, VJV2018
PLENTICORE G3 L	CE, GS, CEI 0-21, C10/11, EN 62109-1, EN 62109-2, EN 60529, EN 50438, EN 50549-1, NA/EEA, G98, G99, EIFS2018, IEC 61727, IEC 62116, RD 1699, RD 647, RFG, TOR generators, UNE 206006, UNE 206007-1, VDE 0126-1-1, VDE-AR-N 4105, VDE-AR-N 4110, VJV2018

Standards EN50438 and EN50549-1 do not apply to all national annexes.

© 2024 KOSTAL Solar Electric GmbH

19.2 Block diagram

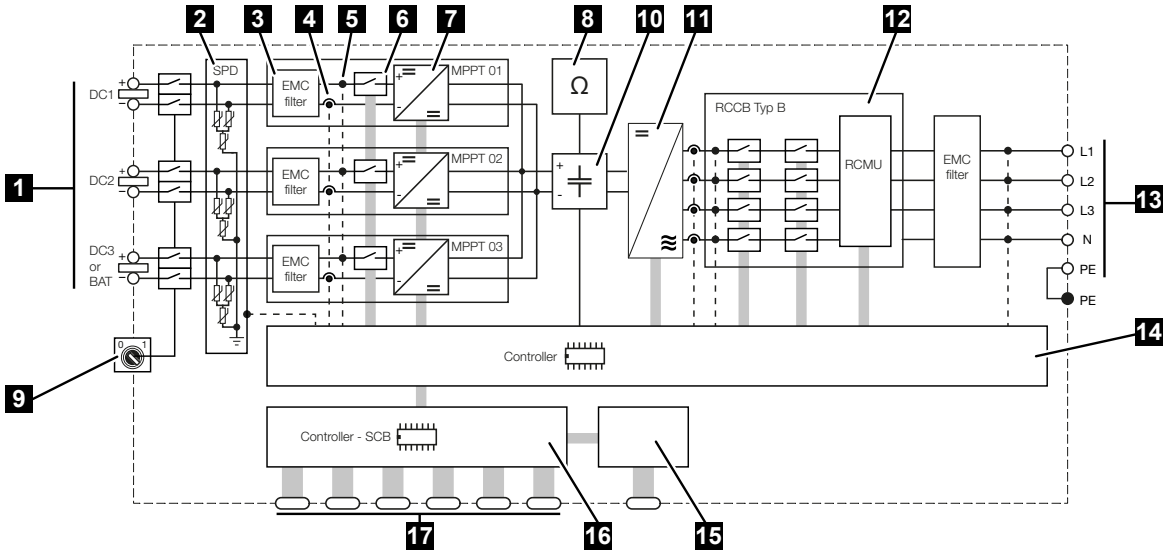

1 DC circuit switch
2 DC input
3 SPD module with monitoring (optional/changeable)
4 Electromagnetic compatibility (EMC) filter
5 Current measuring point
6 Voltage measuring point
7 Electronic DC disconnection device
8 DC regulator
9 Insulation monitoring
10 Intermediate circuit
11 Inverter bridge
12 Grid monitoring and shutdown
13 3-phase AC output
14 System control with MPP trackers
15 Display
16 Smart Communication Board (SCB)
17 Interfaces (e.g. Ethernet, USB, energy meter)

© 2024 KOSTAL Solar Electric GmbH

20. Accessories

20.1 Activating battery connection 265
20.2 DC overvoltage protection 266
20.3 KOSTAL BackUp Switch – manual switch 267

© 2024 KOSTAL Solar Electric GmbH

20.1 Activating battery connection

For the inverter, it is possible to release the third PV input (DC3) as a connection for battery storage. To do this, you can purchase **a battery activation code** from our KOSTAL Solar Webshop and enter this in the inverter. You can then use the third PV input to connect a battery.

You can access the KOSTAL Solar Webshop via the KOSTAL Solar Terminal at **https://terminal.kostal-solar-electric.com**.

KOSTAL Solar Terminal

You will find a list of approved batteries in the download area for the inverter.

Should you have any further questions, please contact our sales team or your service partner.

- Purchase battery activation code from the KOSTAL Solar Webshop .
- Enter battery activation code in inverter or via the Webserver.
- Connect battery to third PV input (DC3) on the inverter.
- Select the settings for the battery in the Webserver.

You can find more information about this on our website **www.kostal-solar-electric.com**.

KOSTAL Solar Electric

© 2024 KOSTAL Solar Electric GmbH

20.2 DC overvoltage protection

An optional type 2 DC overvoltage protection module can be used in the inverter. The overvoltage protection module protects the inverter on the DC side. The overvoltage protection module can be obtained from wholesalers or your installer.

Features:

- DC overvoltage protection module SPD DC type 2 (Surge Protective Device), tested according to IEC 61643-31
- Optional retrofittable plug-in module
- Overvoltage protection module simply plugged into the inverter (plug and play)
- Module automatically activated in the inverter (the module is displayed in the Webserver)
- Failure detection is automatically activated and the failure message is forwarded to the KOSTAL Solar Portal.
- Simple and easy to replace if it fails

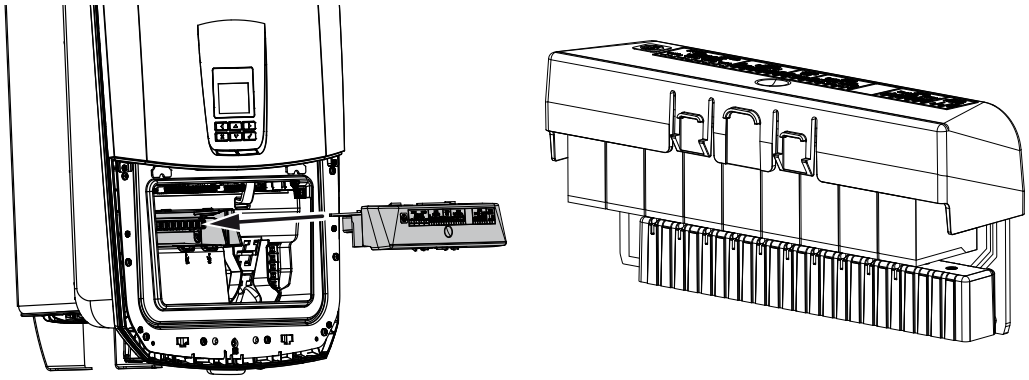

You will find a list of approved KOSTAL Solar Electric **accessories** on our website in the download area for the product.

© 2024 KOSTAL Solar Electric GmbH

20.3 KOSTAL BackUp Switch – manual switch

The inverter with battery enables the house grid to continue to be supplied with energy via PV and battery if there is a power failure.

For this to work, a separation point must be installed at the grid connection point in the house grid and must signal the backup mode to the inverter via a signalling contact.

KOSTAL Solar Electric GmbH offers the ***KOSTAL BackUp Switch*** (manual switch), which manually disconnects the public grid from the house grid in backup mode.

Other, automatic solutions are offered by third parties.

You will find a list of approved KOSTAL Solar Electric **accessories** on our website in the download area for the product.

Be aware of the following points:

- The power in backup mode depends on the installed PV power and the available battery power.
- It is not possible to use all consumers in backup mode.
- The inverter only switches to backup mode when the conditions are met. This means that the consumers must not exceed the power limits available in backup mode. In this case, reduce the consumption (shut down consumers) so that the inverter can switch to backup mode.
- The unbalanced phase load (power difference between the individual phases) must not exceed a certain value.
- The backup mode function must be activated in the inverter's Webserver.

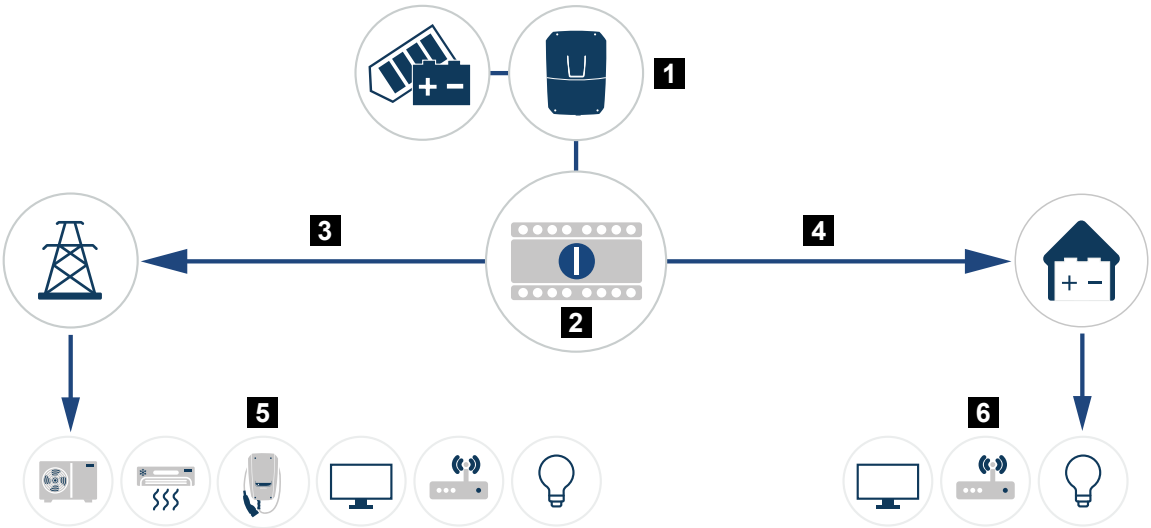

1 PLENTICORE G3

© 2024 KOSTAL Solar Electric GmbH

2 KOSTAL BackUp Switch (manual switch)
3 Mains operation
4 Backup mode
5 Consumers in grid mode
6 Consumers in backup mode

© 2024 KOSTAL Solar Electric GmbH

21. Warranty and service

Information about the service and warranty conditions can be found in the download area for the product at **www.kostal-solar-electric.com**.

For service information and in the event of parts being needed, we require your device type and the serial number. You will find this information on the type plate on the exterior of the housing.

If you have any technical questions, please call our service hotline:

- Germany and other countries (language: German, English):
  +49 (0)761 477 44-222
- Switzerland:
  +41 32 5800 225
- France, Belgium, Luxembourg:
  +33 16138 4117
- Greece:
  +30 2310 477 555
- Italy:
  +39 011 97 82 420
- Poland:
  +48 22 153 14 98
- Spain, Portugal (language: Spanish, English):
  +34 961 824 927

Spare parts

If spare parts or accessories are required for troubleshooting, use only original spare parts and accessories manufactured and/or approved by the manufacturer.

© 2024 KOSTAL Solar Electric GmbH

22. Appendix

22.1 EU Declaration of Conformity 271
22.2 Open Source licence 272
22.3 Decommissioning and disposal 273

© 2024 KOSTAL Solar Electric GmbH

22.1 EU Declaration of Conformity

KOSTAL Solar Electric GmbH hereby declares that the devices described in this document complies with the basic requirements and other relevant conditions of the directives listed below.

- Directive 2014/53/EU
  (RED Radio Equipment and Telecommunications Terminal Equipment) Provision of radio equipment
- Directive 2011/65/EU
  (RoHS) to limit the use of certain hazardous substances in electrical and electronic equipment

You will find a detailed EU Declaration of Conformity for the product in the download area at:

www.kostal-solar-electric.com

© 2024 KOSTAL Solar Electric GmbH

22.2 Open Source licence

This product contains Open Source software, developed by third parties and licensed using vehicles including GPL and/or LGPL.

For more details on this and a list of the Open Source software used and the associated licence texts, go to the Licences section on the website (Webserver) under ***Licences***.

© 2024 KOSTAL Solar Electric GmbH

22.3 Decommissioning and disposal

To dismantle the inverter, proceed as follows:

DANGER

Risk of death due to electrical shock and discharge!

- De-energise device and secure against being switched on again.

1. De-energise inverter on AC and DC side.
2. Remove inverter cover.
3. Remove terminal compartment cover.
4. Loosen terminals and cable glands.
5. Remove all DC cables, AC cables and communication cables.
6. Mount terminal compartment cover.
7. Mount inverter cover.
8. Remove lock screw on the underside of the inverter.
9. Lift the inverter off the wall.

✓ Inverter dismantled

Proper disposal

Electronic equipment labelled with a dustbin with a line through it may not be disposed of with household waste. This equipment can be handed in to waste collection points free of charge.



Find out about the local requirements for the separate collection of electrical and electronic equipment in your country.

© 2024 KOSTAL Solar Electric GmbH

www.kostal-solar-electric.com

03/2024 - EN - DOC03221848-0000 - Subject to technical changes. Errors excepted.
You can find current information at www.kostal-solar-electric.com.