

Pocket WiFi + LAN

Installation Manual

Version 0.0

www.solaxpower.com

eManual and configuration videos in the QR code or at www.solaxpower.com

Safety

Descriptions of Labels

CE	CE mark of conformity	FC	FCC mark of conformity
	RCM mark of conformity		Do not dispose of the device together with household waste.

CE DECLARATION OF CONFORMITY

- The product conforms to RF specifications and technical standards.
- The device complies with DOC declaration.
- The device meets the basic requirements and other relevant provisions of 2014/53/EU directive.
- The device is allowed to be used in all EU member states.
- Hereby, [SolaX Power Network Technology (Zhejiang) Co., Ltd.] declares that the radio equipment type [Pocket WiFi+LAN] is in compliance with Directive 2014/53/EU. The full text of the EU declaration of conformity is available at the following internet address: https://www.solaxpower.com/uploads/file/20240809/Pocket%20WiFi+LAN%20CE%20Declaration.pdf

FCC RULES

This device complies with part 15 of the FCC Rules Operation is subject to the following two conditions:
(1)This device may not cause harmful interference, and
(2)This device must accept any interference received, including interference that may cause undesired operation.
Any changes or modifications not expressly approved by the party responsible forcompliance could void the user's authority to operate the equipment.

FCC RULES

Note:This equipment has been tested and found to comply with the limits for a Class B digital device, pursuant to part 15 of the FCC Rules. These limits are designed to provide reasonable protection against harmful interference in a residential installation. This equipment generates, uses and can radiate radio frequency energy and, if not installed and used in accordance with the instructions, may cause harmful interference to radio communications. However, there is no guarantee that interference will not occur in a particular installation. If this equipment does cause harmful interference to radio or television reception, which can be determined by turning the equipment off and on, the user is encouraged to try to correct the interference by one or more of the following measures:

- Reorient or relocate the receiving antenna.
- Increase the separation between the equipment and receiver.
- Connect the equipment into an outlet on a circuit different from that to which the receiver is connected.
- Consult the dealer or an experienced radio/TV technician for help.

Please scan the QR code below for safety regulations in multiple languages:

Packing List

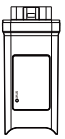

Dongle main body × 1

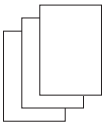

Document

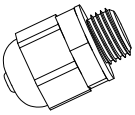

Waterproof connector × 1

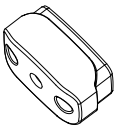

Dongle back cover × 1



M2.5 cross screw × 2

Installation Tools

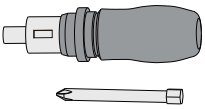

Torque screwdriver (Phillips head: M2.5)

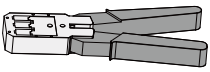

Crimping tool for RJ45 terminal

Installation

Installation steps

⚠ WARNING!

- Ensure that all power has been turned off at least 5 minutes prior to installation.

This product is equipped with two kinds of communication modes (Wi-Fi or LAN). Choose one based on your actual needs.

- Wi-Fi Mode

Installation steps

Step 1: Assemble the Pocket WiFi+LAN **(for WiFi+LAN in boxes)**;

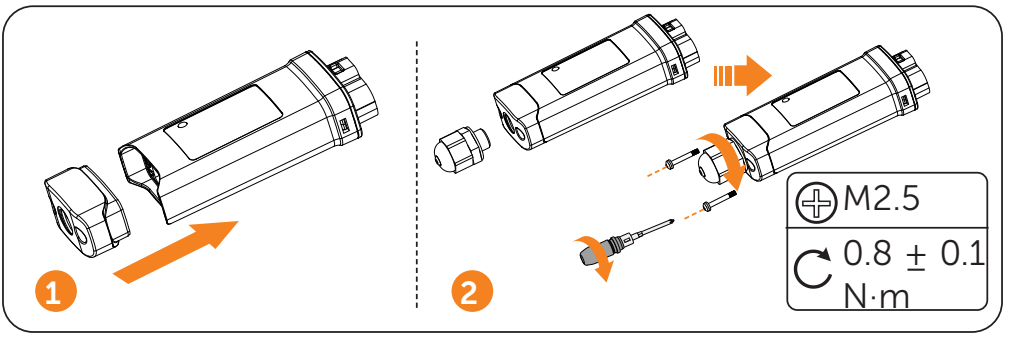

Step 1: Assemble the Pocket WiFi+LAN **(for WiFi+LAN in bags)**;

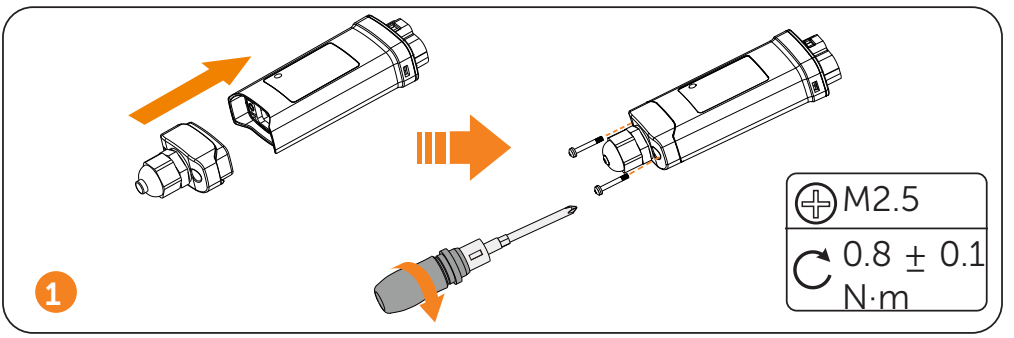

Step 2: Plug the Pocket WiFi+LAN to the inverter.

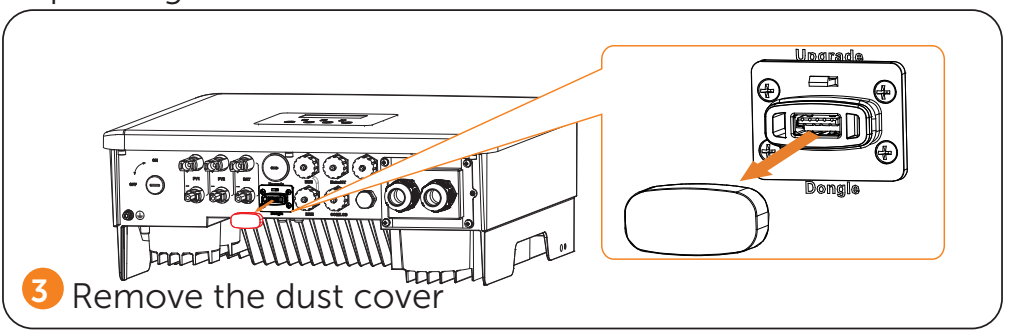

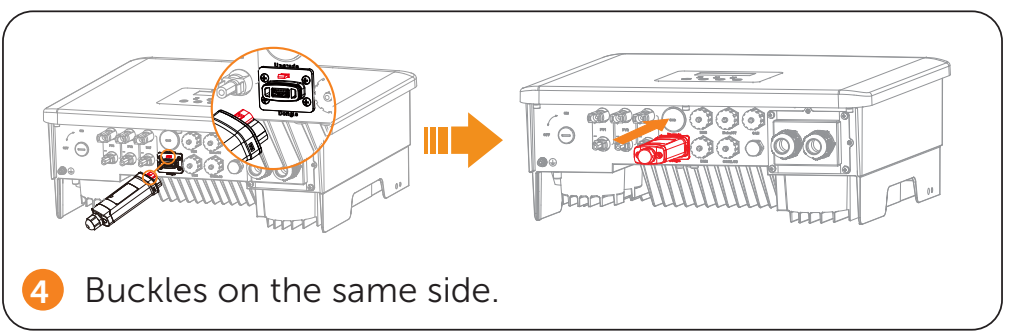

Installation requirements

For Wi-Fi mode, the longest connection distance between the router and the equipment should be no more than 100 meters; if there is a wall between the router and the equipment, the longest connection distance is 20 meters.

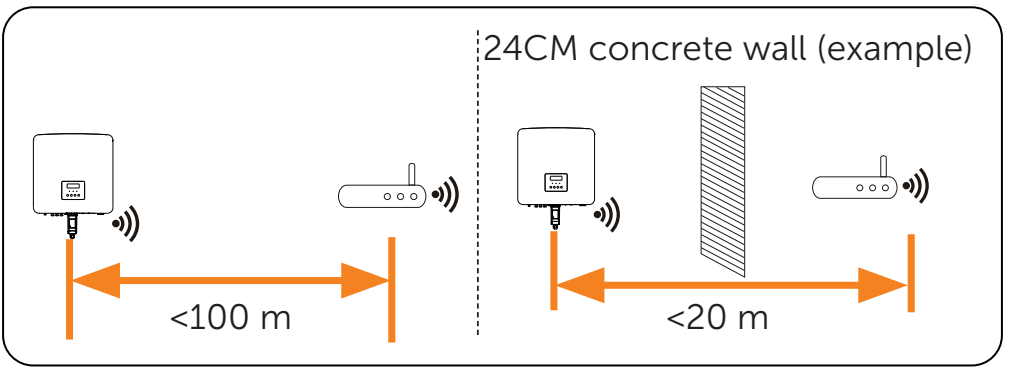

NOTICE!

- When the Wi-Fi signal is weak, please install a Wi-Fi signal booster at the appropriate location.

- LAN mode

Step 1: Disassemble the waterproof connector into components 1, 2 , 3 and 4 ; Component 1 is not used for LAN Mode. Keep it in a safe place.

Step 2: Mount the component 4 to the dongle back cover;

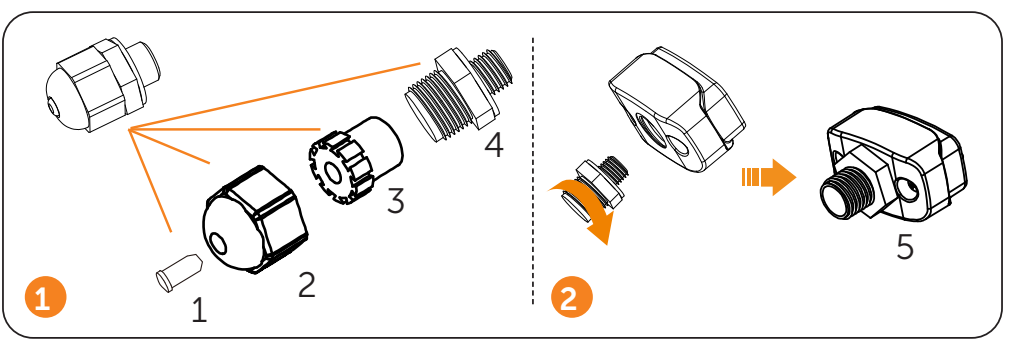

Step 3: Thread the network cable through the following components (2-3-5);

Step 4: The male RJ45 of network cable connects to the female RJ45 on the dongle. Then connect them to the home router.; (a "Click" will be heard if it is successfully connected) Another side of the network cable connects to home router. Make sure the home router is in good condition;

Step 5: Clockwise tighten the components (5-3-2) of Pocket WiFi+LAN in sequence;

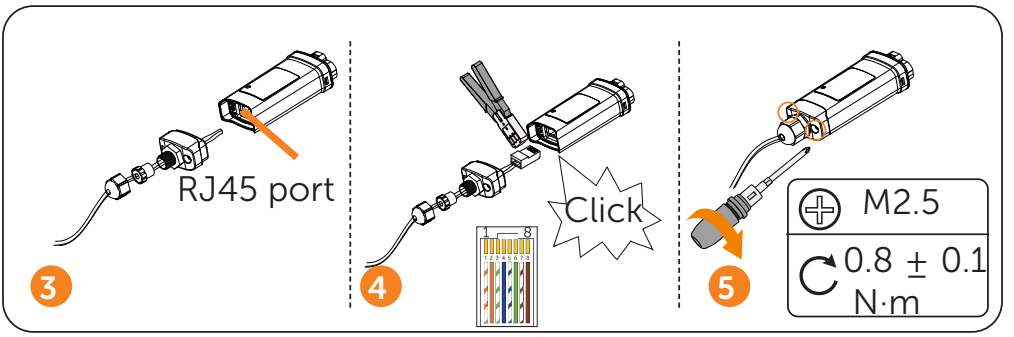

NOTICE!

- Refer to "Wi-Fi Mode" for connection steps on the inverter.

Wi-Fi Configuration

Scan the following QR code or search for the keyword "SolaxCloud" in the APP Store to download the Monitoring APP. Scan the following QR code to read **WiFi Configuration Guide** online.

DOWNLOAD APP

CONFIGURATION GUIDE

NOTICE!

- If you need to download CONFIGURATION GUIDE, please scroll down to the bottom of the interface and click [Download].

Technical data

Model	Pocket WiFi+LAN
Power Supply	5 V 200 mA DC
Rated Power	1 W
Data Transfer Intervals	5 min
EIRP Power	17.93 dBm (Measured Max. Average)
Antenna Gain	3.17 dBi
Wi-Fi standard	802.11 b/g/n
Wi-Fi Band	2.400~2.472 GHz
LAN Bandwidth	10/100 M
Weight	80±10 g
Degree of Protection	IP65
Operating Temperature Range	-35°C ~ +60°C
Wireless Module	WiFi 2.4 GHz
Enthernet	10/100 M

Indicator description

Method	Wi-Fi	LAN
Steady off	Off	
Green light blink quickly (200 ms)	Disconnect to router	
Green light blink slowly (1 s)	Disconnect to inverter	
Green/Red alternately (200 ms)	Disconnect to MQTT server	
Green light steady on	Connected	

SolaX Power Network Technology (Zhejiang) Co., Ltd.

ADD.: No. 278, Shizhu Road, Chengnan Sub-district, Tonglu County, Hangzhou, Zhejiang, China
E-mail: info@solaxpower.com

Copyright © SolaX Power Network Technology (Zhejiang) Co., Ltd. All rights reserved.

320102166700