SUNGROW
Clean power for all

User Manual

High Voltage LFP Battery

SBH100/150/200/250/300/350/400



SBH100-400-UEN-Ver12-202408

All Rights Reserved

All Rights Reserved

No part of this document can be reproduced in any form or by any means without the prior written permission of Sungrow Power Supply Co., Ltd (hereinafter "SUNGROW").

Trademarks

SUNGROW and other Sungrow trademarks used in this manual are owned by SUNGROW.

All other trademarks or registered trademarks mentioned in this manual are owned by their respective owners.

Software Licenses

- It is prohibited to use data contained in firmware or software developed by SUNGROW, in part or in full, for commercial purposes by any means.
- It is prohibited to perform reverse engineering, cracking, or any other operations that compromise the original program design of the software developed by SUNGROW.

About This Manual

The manual mainly describes the product information, guidelines for installation, operation and maintenance. The manual cannot include complete information the system (i.e. the hybrid inverter), just the battery. The reader can get additional information about other devices at **www.sungrowpower.com** or on the webpage of the respective component manufacturer.

Validity

This manual is valid for the following battery models:

- SBH100
- SBH150
- SBH200
- SBH250
- SBH300
- SBH350
- SBH400

They will be referred to as "battery" hereinafter unless otherwise specified.

Target Group

This manual is intended for battery owners who will have the ability to interact with the battery and qualified personnel who are responsible for the installation and commissioning of the battery. Qualified personnel should have the following skills:

- Training for installation and commissioning of electrical system, as well as dealing with hazards
- Knowledge of the manual and other related documents
- Knowledge of the local regulations and directives

How to Use This Manual

Read the manual and other related documents before performing any work on the battery. Documents must be stored carefully and be available at all times.

Images in this manual are for reference only. The actual product received may differ.

Contents may be periodically updated or revised due to the product development. It is probably that there are changes of manual in the subsequent battery edition. The latest manual can be acquired via visiting the website at **support.sungrowpower.com**.

Symbols

Important instructions contained in this manual should be followed during installation, operation and maintenance of the hybrid inverter. They will be highlighted by the following symbols.

⚠ DANGER

Indicates a hazard with a high level of risk that, if not avoided, will result in death or serious injury.

⚠ WARNING

Indicates a hazard with a medium level of risk that, if not avoided, could result in death or serious injury.

⚠ CAUTION

Indicates a hazard with a low level of risk that, if not avoided, could result in minor or moderate injury.

NOTICE

Indicates a situation that, if not avoided, could result in equipment or property damage.

Indicates additional information, emphasized contents or tips that may be helpful, e.g. to help you solve problems or save time.

Abbreviation

BMS: Battery Management System

BMU: Battery Management Unit

CAN: Controller Area Network

CMU: Battery Cluster Management Unit

LFP: Lithium iron phosphate

SOC: State of Charge

MCB: Miniature DC circuit breaker

PACK:battery module

1 Safety Instructions

When installing, commissioning, operating, and maintaining the product, strictly observe the labels on the product and the safety requirements in the manual. Incorrect operation or work may cause:

- Injury or death to the operator or a third party.
- Damage to the product and other properties.

⚠ WARNING

- **Do not perform any operation on the product (including but not limited to, handling, installing, powering on, or maintaining the product, performing electrical connection, and working at heights) in harsh weather conditions, such as thunder and lightning, rain, snow, and Level 6 or stronger winds. SUNGROW shall not be held liable for any damage to the device due to force majeure, such as earthquakes, floods, volcanic eruptions, mudslides, lightning strikes, fires, wars, armed conflicts, typhoons, hurricanes, tornadoes, and other extreme weathers.**
- **In case of fire, evacuate from the building or product area and call the fire alarm. Re-entry into the burning area is strictly prohibited under any circumstances.**

NOTICE

- **Tighten the screws with the specified torque using tools when fastening the product and terminals. Otherwise, the product may be damaged. And the damage caused is not covered by the warranty.**
- **Learn how to use tools correctly before using them to avoid hurting people or damaging the device.**
- **Maintain the device with sufficient knowledge of this manual and use proper tools.**

- The safety instructions in this manual are only supplements and cannot cover all the precautions that should be followed. Perform operations considering actual onsite conditions.
- SUNGROW shall not be held liable for any damage caused by violation of general safety operation requirements, general safety standards, or any safety instruction in this manual.
- When installing, operating, and maintaining the product, comply with local laws and regulations. The safety precautions in this manual are only supplements to local laws and regulations.
- During the product transport, installation, wiring, maintenance, etc., the materials and tools prepared by users must meet the requirements of applicable local laws and regulations, safety standards, and other specifications. SUNGROW shall not be held liable for any damage to the product caused by the adoption of materials and tools that fail to meet the above-mentioned requirements.
- Operations on the product, including but not limited to, handling, installing, wiring, powering on, maintenance, and use of the product, must not be performed by unqualified personnel. SUNGROW shall not be held liable for any damage to the product resulting from operations done by unqualified personnel.
- Where the transport of the product is arranged by users, SUNGROW shall not be held liable for any damage to the product that is caused by users themselves or the third-party transport service providers designated by the users.
- SUNGROW shall not be held liable for any damage to the product caused by the negligence, intent, fault, improper operation, and other behaviors of users or third-party organizations.
- SUNGROW shall not be held liable for any damage to the product arising from reasons unrelated to SUNGROW.

1.1 Notices for Safe Use

Read all safety instructions carefully prior to any work and observe them at all times when working on or with the battery. Failure to observe the precautions described in this section can cause serious injury to persons or damage to property.

DANGER

Risk of explosion

- **Do not subject the battery to any strong force.**
- **Do not mechanically damage the battery (pierce, deform, strip down, etc.)**
- **Do not heat the battery or dispose of the battery in a fire.**
- **Do not install the battery in potentially explosive environments.**
- **Do not place the battery in water or other liquids.**

DANGER

Risk of fire

- **Do not place the battery near a heat source, such as direct sunlight, a fireplace, a thermally uninsulated wall exposed to sunlight, hot water, or a heater.**
- **Keep sources of ignition such as sparks, flames, and smoking materials away from the battery.**

DANGER

Risk of electric shock

- **Do not disassemble the battery.**
- **Do not handle a wet battery or use wet tools.**
- **Do not soak the battery in water or expose it to moisture or liquids.**
- **Keep the battery away from children and animals.**
- **Wear suitable clothing, guards and gloves to prevent you from direct contact with the DC voltage.**
- **Use insulated tools during working with battery.**
- **Set aside metal jewelry before working on the DC circuit.**

1.2 Battery Handling Information

NOTICE

Follow local standards to use the battery.

Any man-made damage will void the limited warranty for the battery. Handle the battery with care to protect it from damage.

- Use the battery only as intended and designed.
- The battery must only be installed at a suitable location.
- Make sure the battery is well connected to ground before use.
- Do not use the battery if it is defective, appears cracked, broken or damaged, or fails to operate.
- Do not use the battery together with other types of batteries.
- Do not pull, drag or step on the battery.
- Do not leave any foreign objects inside the battery.
- Do not repair or modify the battery. It is not user serviceable.
- Do not pull out any cables when the battery is powered on.
- Do not damage the sheath of cables, wire harness and connectors.
- While the battery is charged, used and stored, keep it away from materials that are prone to electric discharge, including static discharge.
- Keep the battery away from babies and children to avoid any accidents.
- Cover terminals with insulating tape before proper disposal.
- Avoid direct contact with rain, snow, and water, and prevent the battery from falling and mechanical impact during battery transportation.

1.3 Emergency Situations

1.3.1 Leaking Batteries

Abuse/misuse/damage of the battery may cause increasing of internal pressure in the battery cells. It may result in the electrolyte venting. In the event that battery electrolyte is released:

- Do not enter the room under any circumstance.
- Avoid contact with the leaking liquid or gas.
- Call the Local Emergency number or Fire Brigade if necessary.

If one is exposed to the leaking substance, follow the suggestions below to minimize the chance of injury:

- Inhalation: Evacuate the contaminated area, and seek medical aid.
- Eye contact: Rinse eyes with copious amounts of water for at least 15 minutes, and seek medical aid immediately.

- Skin contact: Wash the affected area thoroughly with plenty of water for at least 15 minutes. If possible, remove or saturate contaminated clothing with water. Seek medical aid if the patient is distressed.
- Ingestion: Induce vomiting, and seek medical aid immediately.

Wipe out the contacted area with a sponge or cloth that is soaked in water until you obtain medical aid. These materials can damage skin and eyes, causing blindness.

1.3.2 Fire

Fire may occur with the battery despite its careful design. Likewise, a fire or unusually high temperatures near the battery can cause it to catch fire.

Protective equipment

A respirator is not required during normal operations.

In the event of a fire, hazardous fumes including carbon monoxide, carbon dioxide, and/or various hydrocarbons may be emitted. To comply with the Personal Protective Equipment Directive (89/686/EEC), use a full-face self-contained breathing apparatus (SCBA) with full protective gear during fire fighting.

Fire fighting

NOTICE

In the event of a fire, only qualified firefighters with appropriate protective equipment are permitted to enter the room where the battery is located.

It may take a long time to completely extinguish the fire. Consider allowing the system to burn. Smoke indicates that the battery is still burning. Always note that there is a risk of the battery re-igniting.

Proceed as follows for fire-fighting.

1. Shut off any connected power system or electronics such as the battery, battery isolator, PV DC isolator(s), AC isolator, solar supply main switch and normal supply main switch.
2. Perform an adequate knock down on the fire before entering the incident's hot zone.
3. If the battery catches on fire, use fire-fighting sand, CO_2 extinguisher, or other emergency fire extinguishing equipment approved by fire fighters to extinguish the fire.
4. If the fire is not from the battery and has not spread to it yet, use an ABC fire extinguisher to extinguish the fire. Remove batteries and other ignition sources from the scene of a fire.

1.3.3 Wet Batteries

If the battery is submerged in water, do not let people access it, and then contact Sungrow or an authorized service partner for technical support.

If a battery is submerged in water or flooded, first, switch off all circuit breakers in the system to cut off the power supply to the battery. Wait until floodwaters subside and do not approach near battery. If someone needs to go into the flooded water, wear insulated full length rubber boots and gloves.

Do not use a flooded battery again.

1.3.4 Damaged Batteries

The battery consists of lithium-ion cells. These are considered dry cell batteries. If the battery is damaged, only a small amount of battery fluid can leak.

A damaged battery can cause rapid heating of the battery cells. If you notice smoke coming from the battery area, assume that the battery is burning and take appropriate action as described in 1.3.2 Fire.

Damaged batteries are dangerous and must be handled with extreme caution. They are not fit for use and may pose a danger to people or property. If a battery seems to be damaged:

1. Pack it in its original container.
2. Store it in a separated room like the installation place.
3. Contact SUNGROW.

⚠ DANGER

A damaged battery may release dangerous material and a flammable gas mixture. Never try to repair the battery even if you are a qualified electrician.

2 Product Description

2.1 Product Introduction

Overview

As an important part of the PV power generation system, SBH100-400 high-voltage battery system works in conjunction with the hybrid inverter to store energy and supply it later for household use.

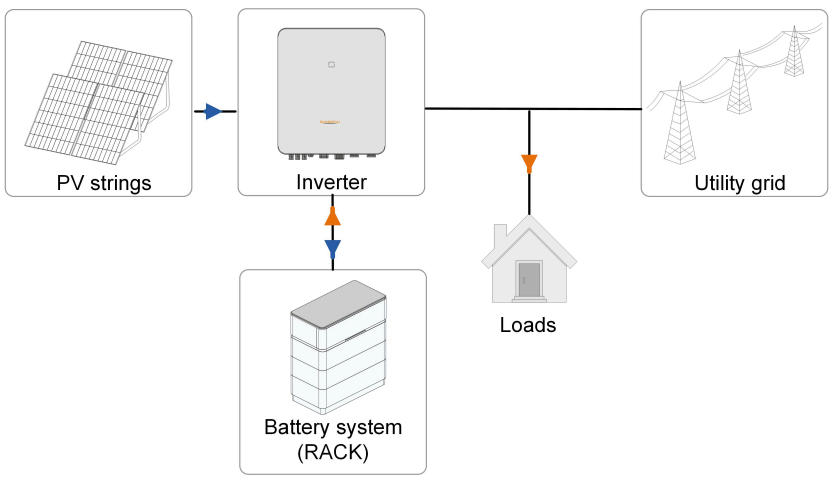

figure 2-1 System Diagram

The battery system (RACK) is composed of a top cover, a switch gear, PACKs (battery modules), and a base. The system operates at voltages ranging from 118.8V to 642.4V, allowing 2-8 PACKs to be stacked and connected in series (**n**=number of PACKs in the figures below).

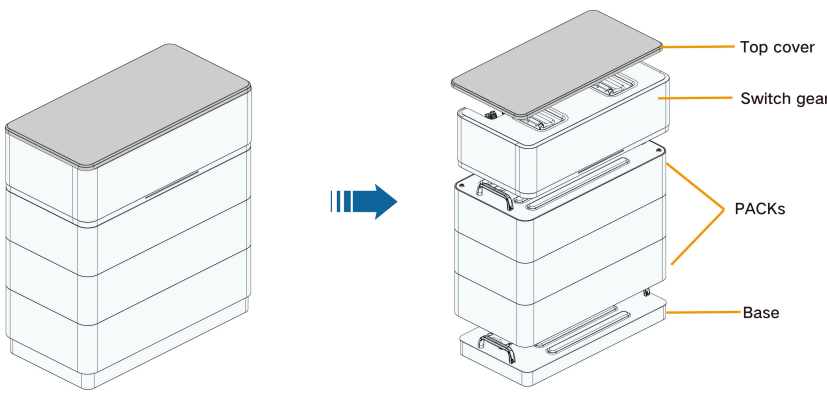

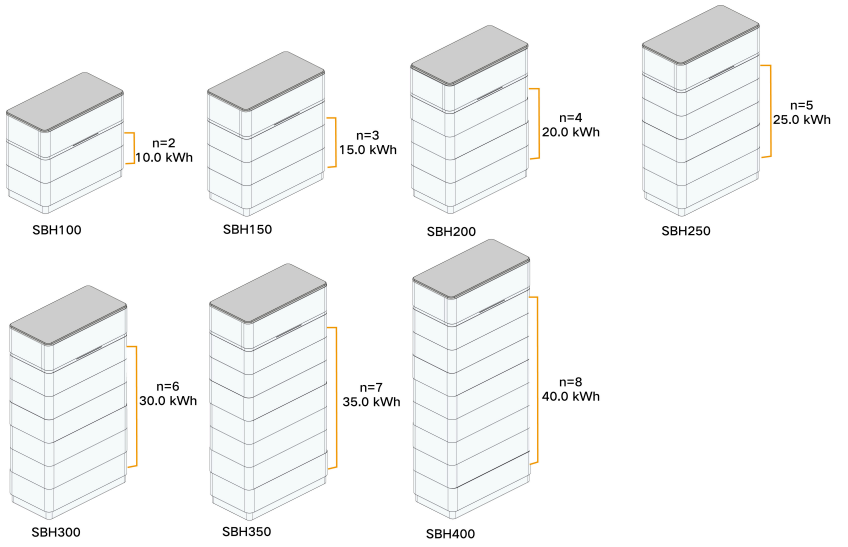

*The images shown are for illustration purposes only. The actual product may vary.

table 2-1 System Composition

No.	Battery system	Base	PACK	Switch gear	Top cover
1	SBH100	1	2	1	1
2	SBH150	1	3	1	1
3	SBH200	1	4	1	1
4	SBH250	1	5	1	1
5	SBH300	1	6	1	1
6	SBH350	1	7	1	1
7	SBH400	1	8	1	1

2.2 Component Introduction

Switch Gear

The switch gear is equipped with a DC circuit breaker and a BMU, etc., and is used for battery monitoring, energy transmission, and signal interaction.

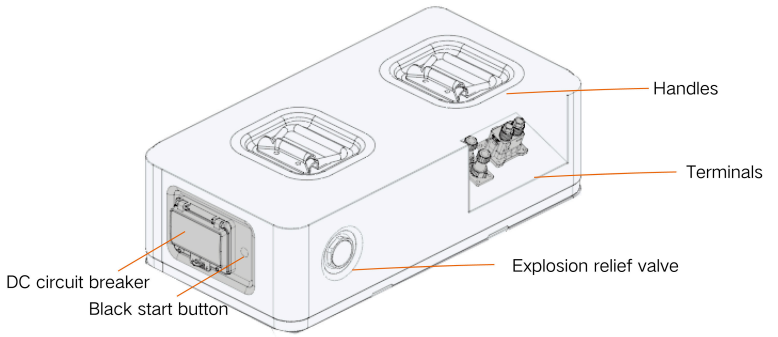

table 2-2 Parameters of the Switch Gear

Parameter	Value
Dimensions (W*H*D)	675 ± 5 mm * 194 ± 5 mm * 350 ± 5 mm (handles and terminals not counted)
Weight	11±1kg
Current range	-65 to 65A
Voltage range	0 to 650V

Do not rotate the explosion relief valve.

PACK

The PACK is used for energy storage and supply. A single PACK is composed of cells connected in series. Data such as cell temperature and voltage are collected and then transmitted to the BMU inside the switch gear for processing.

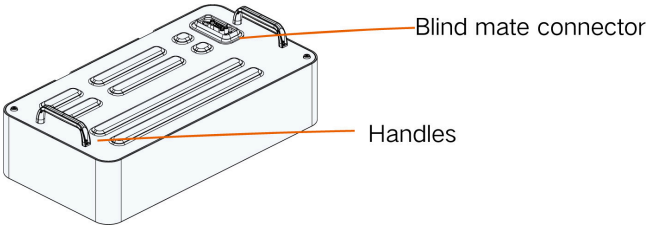

table 2-3 PACK Parameters

Parameter	Value
Dimensions (W*H*D)	675 ± 5 mm * 160 ± 5 mm * 350 ± 5 mm (handles and the connector not counted)
Weight	45±2kg
Rated capacity	72Ah
Rated energy	5.0kWh

Voltage range	55 to 80.3V

Base

The base is used for holding the switch gear and the PACKs.

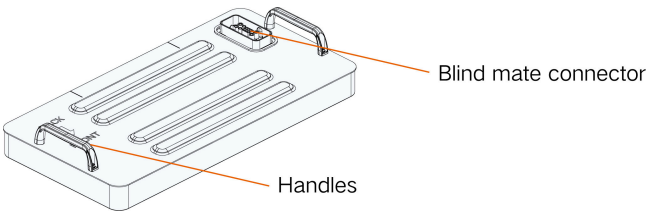

table 2-4 Base Parameters

Parameter	Value
Dimensions (W*H*D)	650 ± 5 mm * 55 ± 5 mm * 325 ± 5 mm (handles, footpads, and the connector not counted)
Weight	2.5kg±1kg

2.3 Symbols on the Product

Symbol	Explanation
	Pay attention to the danger. Do not operate this product in the live status!
	No open flames Do not expose to flame, incinerate, puncture, or impact.
	Electric shock hazard Serviced by qualified personnel only. Out of reach from children.
	TÜV mark of conformity
	TÜV mark of conformity
	CE mark of conformity EU/EEA Importer
	UKCA mark of conformity
	Do not dispose in trash. Compacting a lithium ion battery is dangerous as it can explode.

Symbol	Explanation
	Please recycle this lithium ion battery. Do not discard.
	Read the user manual before maintenance!
	This is a protective grounding terminal, which should be grounded securely to protect the safety of operators.

2.4 LED Indicators

The battery system is equipped with two LED indicators, SOC indicator and status indicator.

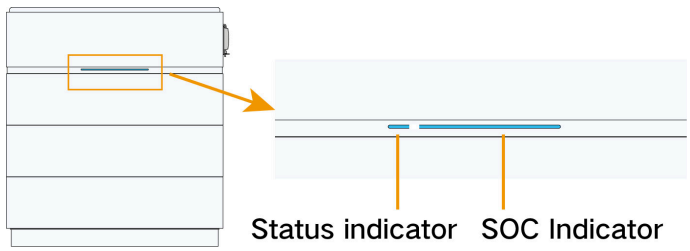

figure 2-2 LED Indicators

SOC Indicator

The SOC indicator indicates the current SOC of the battery. The indicator is designed with 5 bars in total, each for 20% SOC.

SOC Indicator	SOC
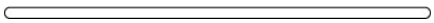	0
	0<SOC≤20%
	20%<SOC≤40%
	40%<SOC≤60%
	60%<SOC≤80%
	SOC > 80%

SOC indicator	Status	Description
	Steady on	The battery system works normally
	Blinking	The battery system is being charged/discharged

Status indicator

The status indicator indicates the current status of the battery system, as shown in the table below.

Status indicator	Color	Status	Description
	Blue	Steady on	The battery system works normally
		Blink slow (at an interval of 1s)	The battery system is booting or in standby mode
		Blink fast (at an interval of 0.5s)	The battery system is being upgraded, tested, or calibrated
	Red	Steady on	Battery system fault
		Blink slow (at an interval of 1s)	Battery system alarm
	Grey	Off	No fault has occurred to the battery system

*The images shown are for illustration purposes only. The actual product may vary.

3 Unpacking and Storage

3.1 Unpacking and Inspection

The product has undergone strict tests and inspections before delivery. However, as it may still get damaged during transportation, please carry out a thorough inspection before signing the delivery receipt.

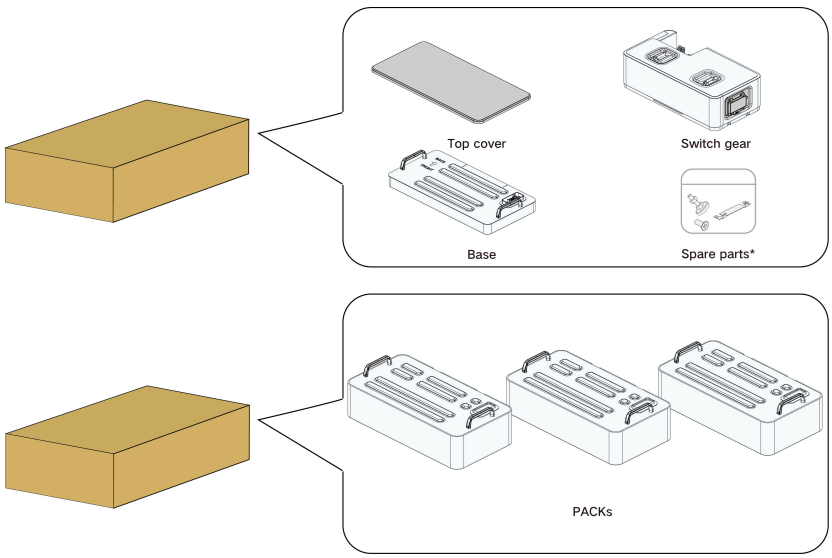

*Please refer to 3.2 Scope of Delivery for the list of parts and components.

- Inspect the packaging box for any damages.
- Check the delivered items for quantity and see if the delivery matches the order placed according to the packing list.
- Unpack and inspect the items inside for any damages.

Contact the transport company or SUNGROW in case of any damages or missing items, and provide relevant photos or the name/quantity of the missing items for better services.

Do not throw away the original packaging box. It is recommended to store the device in its original packaging after it is decommissioned.

NOTICE

Inspect the product for any external damages or damages to the structural parts, and check if the packing list matches the order placed. In case of any problem with the above-mentioned inspection items, do not install the device and contact SUNGROW in time.

If any tool is used for unpacking, be careful not to damage the product.

3.2 Scope of Delivery

Main Components

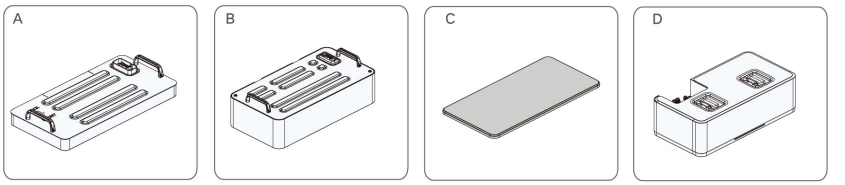

Item	Name	Quantity
A	Base	1
B	PACK	2 - 8
C	Top cover	1
D	Switch gear	1

1. The images shown here are for illustration purposes only. The actual product may vary.

Parts

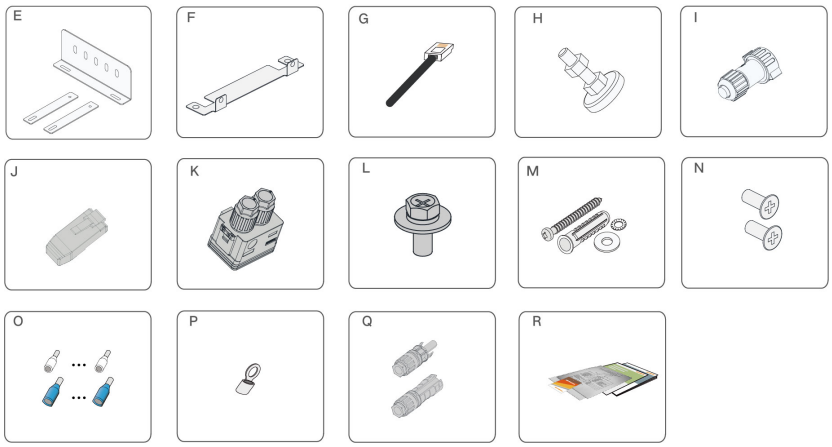

Item	Name	Quantity
E	Battery fixing bracket	1 set
F	Switch gear fixing bracket	2
G	Communication cable	1
H	Footpads	4
I	Communication connector	2
J	Termination resistor	1
K	Power connector	1
L	M5 screw assembly	5
M	Expansion bolt	3
N	M4 countersunk screw	6
O	Cold-pressed terminal	2
P	OT terminal	1
Q	Battery contact	1
R	Quick installation guide	1

3.3 Storage

Proper storage is required if the battery is not installed immediately.

- Store the battery in the original packing case with the desiccant inside.
- Store the battery in a clean and dry place, without exposure to sunlight and rain.
- The storage location must be free of harmful gases, flammable/explosive products and corrosive chemicals. The battery should be prevented from mechanical impact, high pressure, high-intensity magnetic field and direct exposure to sunlight.

- The battery should be stored at ambient temperatures of -10℃ to 35℃. The recommended storage time is ≤ 6 months, and the maximum storage time should not exceed 12 months.
- The battery should be charged, if it has been stored for over 12 months under specific conditions, till the system SOC reaches 40%. It is recommended to charge the battery using force mode, which can be enabled by setting the inverter.
- The storage relative humidity must be always between 0 and 95%, non-condensing.
- The number of stacking layers of battery modules with package must not exceed 6. It is strictly forbidden to directly stack batteries without package.
- The packing should be upright.
- Regularly inspect the package for damage and insect bites. If any damage is found, the product should be replaced immediately.

If the battery is stored over one year, 5% - 8% of the capacity may lose irreversibly.

4 Mounting

4.1 Safety during Mounting

⚠ WARNING

This product or system must be operated by professionals!

Failure to follow the safety instructions in this manual or operation of this product or system by non-professionals may cause severe personal injury or major property damage.

⚠ WARNING

Strictly follow local relevant standards and requirements in the whole process of installation.

4.2 Location Requirements

Select an optimal mounting location for safe operation, long service life and expected performance.

The battery with IP55 can be installed both indoors and outdoors.

Install the battery in a place convenient for electrical connection, operation, and maintenance.

- The battery with IP55 can be installed both indoors and outdoors.
- Install the battery in a place convenient for electrical connection, operation, and maintenance.
- Do not install the device in areas within 500 meters of the coastline or prone to sea winds. Otherwise, the battery may get corroded, thus resulting in fire.
- The installation environment must be free of inflammable or explosive materials.
- Keep the device out of the reach of children.

Installation Environment Requirements

- The battery should be well ventilated. Ensure air circulation.
- The temperature and humidity should meet the following requirements:

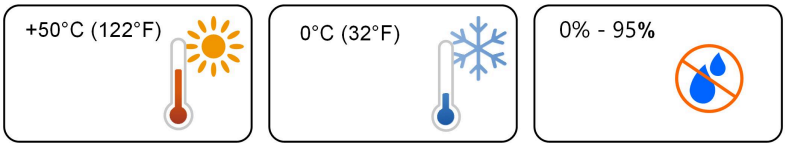

- Avoid direct exposure to sun, rain and snow.

The battery system may derate if the ambient temperature goes higher than 40℃.

Installation Angle Requirements

It is recommended to adopt the wall-mounting installation for the battery system. Do not install it askew.

Installation Carrier Requirements

The battery system should be positioned close to the wall and fitted using the battery fixing bracket, so as to prevent it from tipping over.

The support structure, to which the battery system is fitted, should be fireproof and not made of flammable materials.

Please make sure the support structure is solid enough to hold the device.

Installation Clearance Requirements

Reserve enough clearance around the battery to ensure sufficient space for heat dissipation.

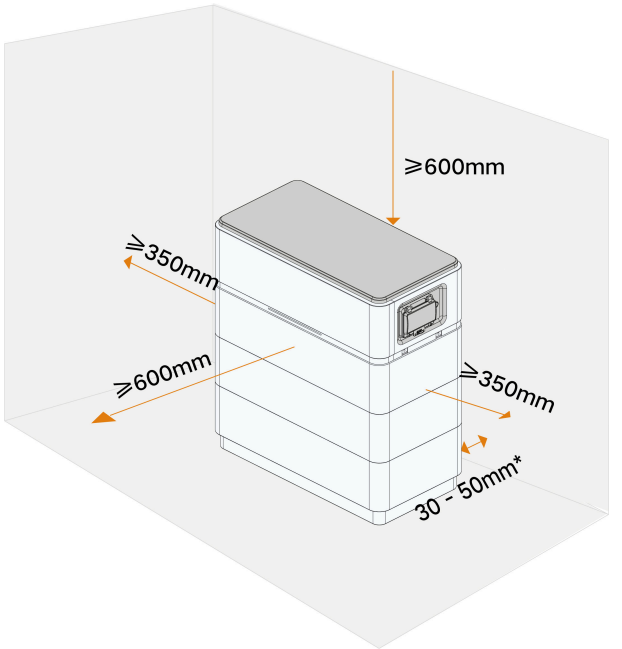

* This distance is the distance between the RACK and the wall.

In case of multiple batteries, reserve specific clearance between the batteries.

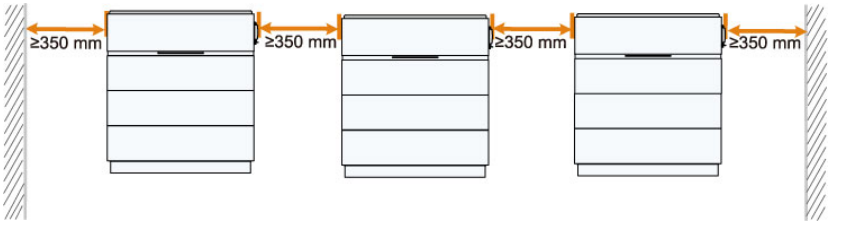

4.3 Installation Tools

Installation tools include, but are not limited to, the following recommended ones. If necessary, use other auxiliary tools on site.

table 4-1 Tool specification

	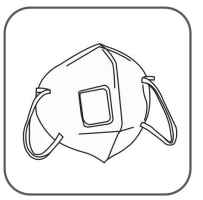		
Goggles	Dust mask	Safety gloves	Safety shoes



Utility knife



Marker

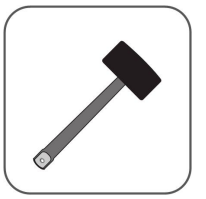

Rubber mallet

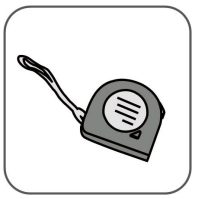

Measuring tape

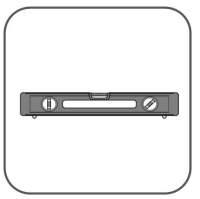

Level



Hammer drill (φ10)



Torque screwdriver (ST6.3, M4, M5, M6)



Torque wrench (16 mm, 17mm, 35mm)

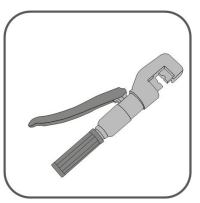

Hydraulic pliers



Heat gun

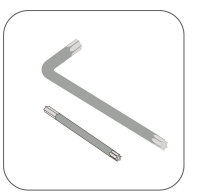

M4 Allen wrench



Terminal crimping tool (10mm^2, cold-pressed terminal)



Wire stripper



Crimping tool (4-6mm^2)

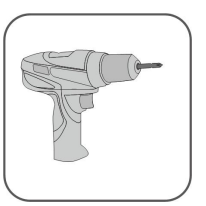

Electric drill (ST6.3, M4, M5, M6)

4.4 Battery System Installation

Installation should be conducted on a flat surface in an open space.

The installation process is illustrated with SBH150 as an example.

step 1 Fit the footpads onto the battery base to make it level.

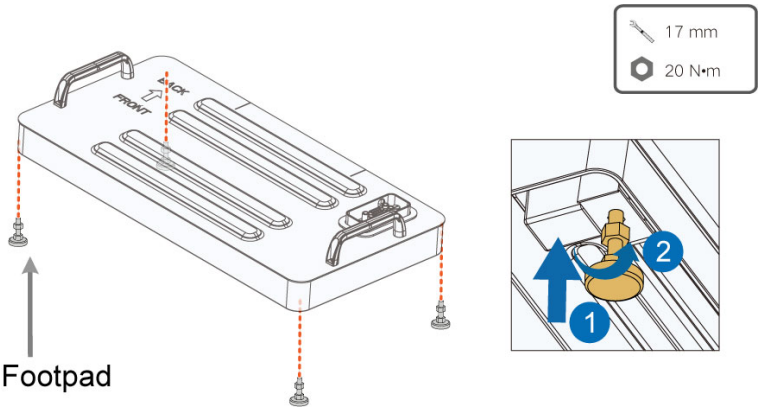

step 2 Mark the locations of holes for installing the battery fixing bracket. Position the base with its back against the wall, mark the installation position of the battery fixing bracket, and then move the base away.

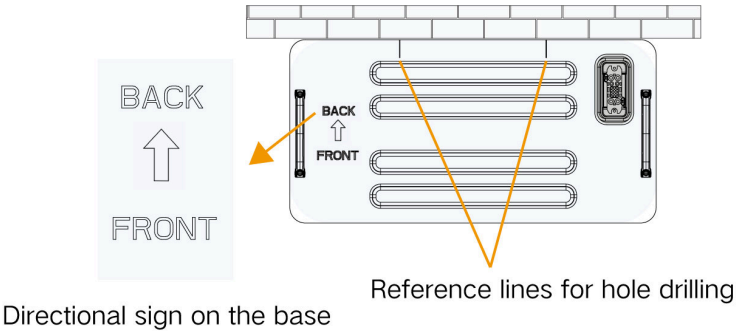

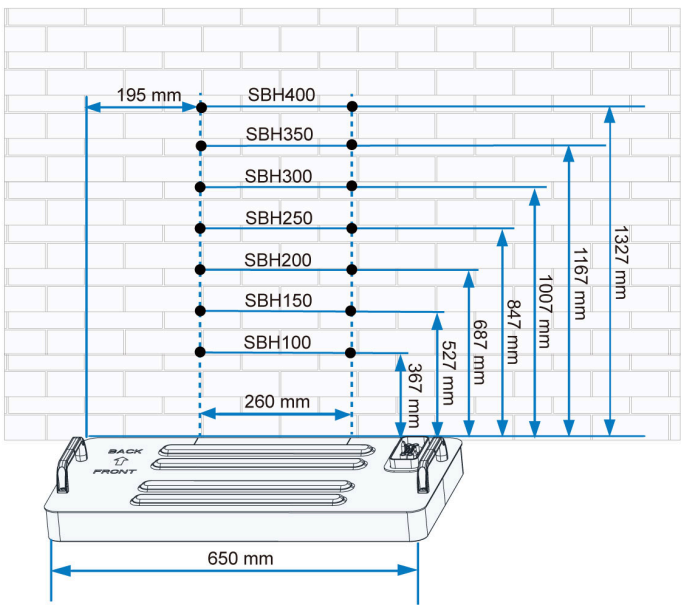

Reference lines for hole drilling: Used for determining the spacing between the two holes at the ends of the battery fixing bracket.

Directional sign on the base: Used for identifying the front and the back of the base. The arrow points from FRONT to BACK.

step 3 Drill holes according to the markings, and fit the expansion bolts.

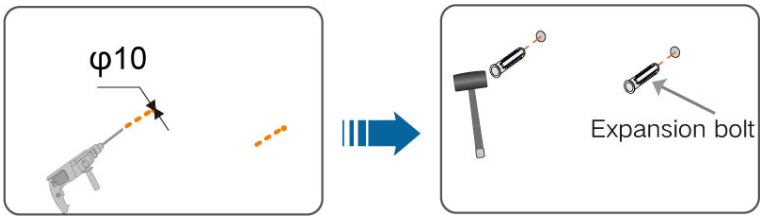

NOTICE

Please wear goggles and masks while drilling holes, so as to protect your eyes and respiratory system from dust and dirt. Clean the dust around in time after finishing drilling.

step 4 Position the base 42-62mm away from the wall, so that the battery fixing bracket can be installed.

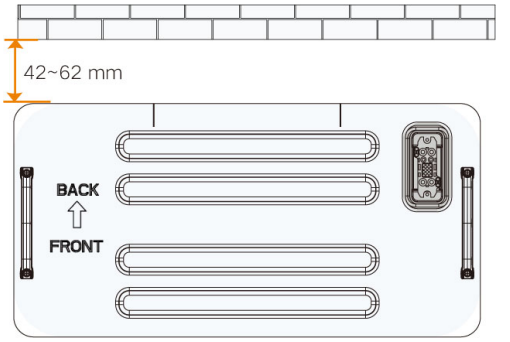

step 5 Place the PACKs on the base one by one from bottom to top.

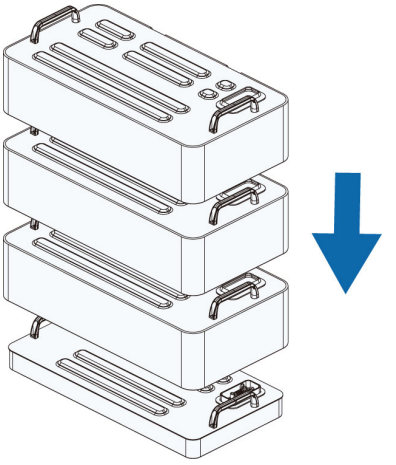

Do not tip the PACK on one side during installation.

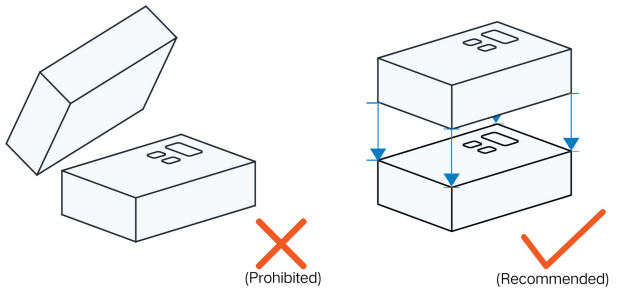

step 6 Install the battery fixing bracket, to make sure the battery system will not tip over.

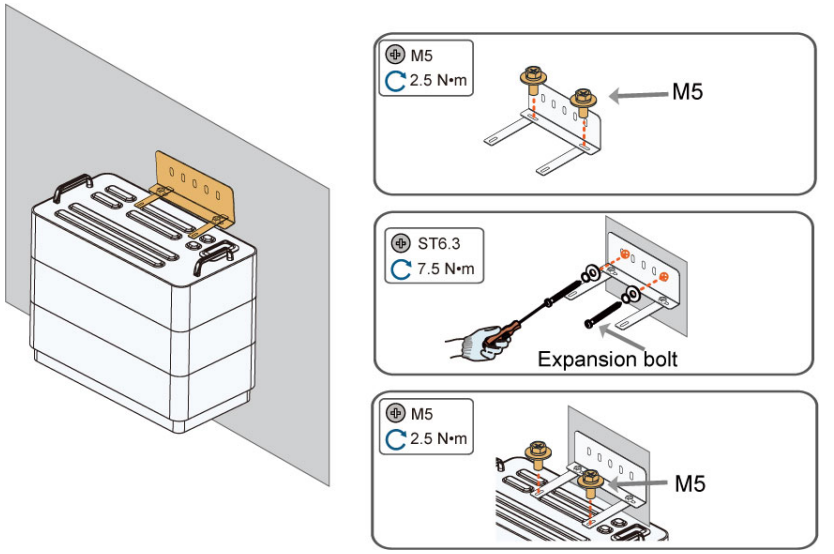

The battery fixing bracket should be installed on the top PACK.

The installation position can be adjusted slightly through the slotted holes on the back.

step 7 Assemble the switch gear.

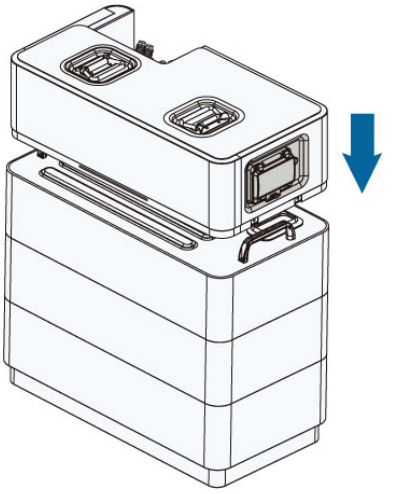

step 8 It is needed to install the switch gear fixing bracket, so as to prevent arc faults caused by moving the switch gear by mistake. Insert the bracket into the gap between the switch gear and the PACK, and fix it using screws.

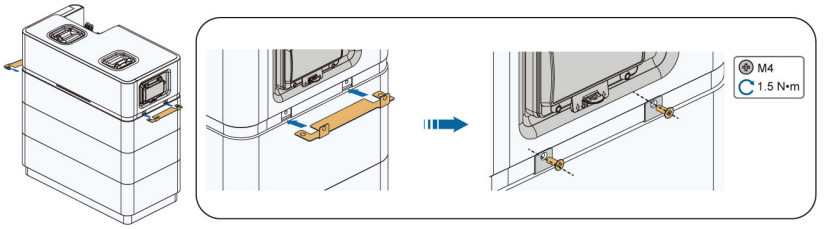

- - End

5 Electrical Connection

5.1 Safety Instructions

DANGER

- **Operators must wear proper personal protective equipment during electrical connections.**
- **Must ensure that cables are voltage-free with a measuring instrument before touching DC cables.**
- **Ensure that the battery system is undamaged and all cables are voltage free before performing electrical work.**
- **Batteries deliver electric power, resulting in burns or a fire hazard when they are short circuited, or wrongly installed.**

WARNING

Damage to the product caused by incorrect wiring is not covered by the warranty.

- **Electrical connection must be performed by professionals.**
- **All cables used in the system must be firmly attached, properly insulated, and adequately dimensioned.**

NOTICE

All electrical connections must comply with local and national / regional electrical standards.

- **All vacant terminals must be covered with waterproof covers to prevent affecting the protection rating.**
- **When laying out communication cables, separate them from power cables and keep them away from strong interference sources to prevent communication interruption.**
- **Cables used by the user shall comply with the requirements of local laws and regulations.**
- **The cable colors in figures in this manual are for reference only. Please select cables according to local cable standards.**

5.2 Terminal Description

Electrical terminals are set on the switch gear, as shown below.

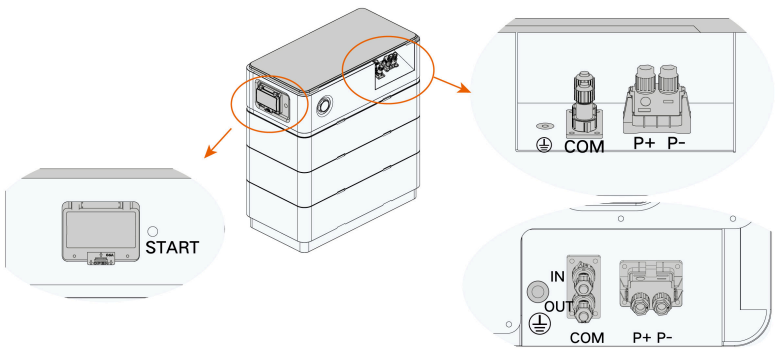

*The images shown are for illustration purposes only and may not be an exact representation of the actual product.

Name	Mark	Note
Battery DC input terminal	P+ P-	P+: Connected to the positive terminal of the hybrid inverter P-: Connected to the negative terminal of the hybrid inverter
Communications terminal	COM	Two communication ports are available. IN is used for connecting the termination resistor, while OUT for the hybrid inverter.
PE terminal	⏚	Used for reliable protective grounding of the battery system.
DC circuit breaker	/	Used to turn on/off the battery system, as well as enable short-circuit protection, by breaking or closing the DC circuit.
Black start button	START	To enable black start of the battery system.

5.3 Electrical Connection Overview

The electrical connection between the battery system and the inverter is illustrated in the figure below.

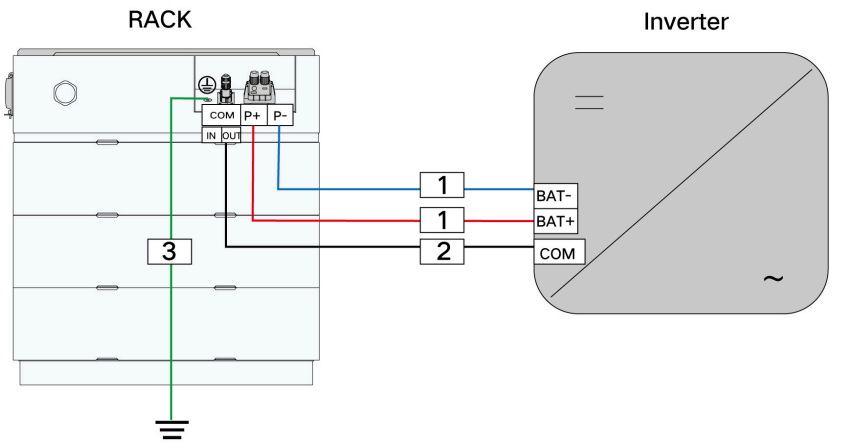

figure 5-1 Diagram of Electrical Connection Between the Battery System and the Inverter

table 5-1 Cable Requirements

No.	Name	Type	Specification	
			Outer diameter (mm)	Cross-sectional area of conductor (mm^2)
1	DC cable	Multi-core PV cable, able to withstand voltages of >1100V	6 - 9	10 - 16 (7 - 5AWG)
2	Communication cable	Cat5e shielded network cable (provided as one of the accessories)	/	/
3	Protective grounding cable	Outdoor multi-core copper-conductor cable, able to withstand a voltage of 1000V and work at the temperature of 105℃	6 - 9	10 - 16 (7 - 5AWG)

Secure the power cables and the communication cable near the battery respectively using cable ties (do not bind the power cable and communication cable together) and ensure a U-curve in the cables, as shown in the figure below. This restricts the cable movement and reduces the risk of water flowing into the battery along the cables.

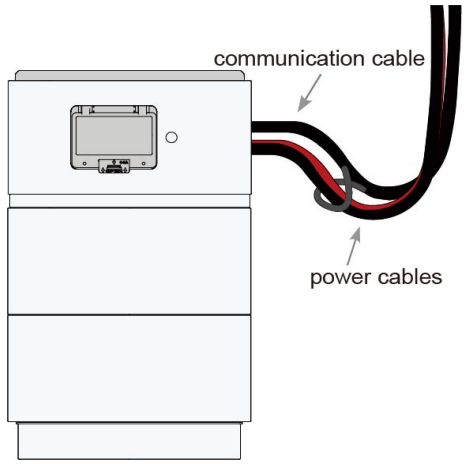

5.4 External Grounding Cable Connection and Disconnection

Connect the grounding cable

The grounding cable should be prepared by the customer separately.

1. Crimp the OT/DT terminal onto the cable.

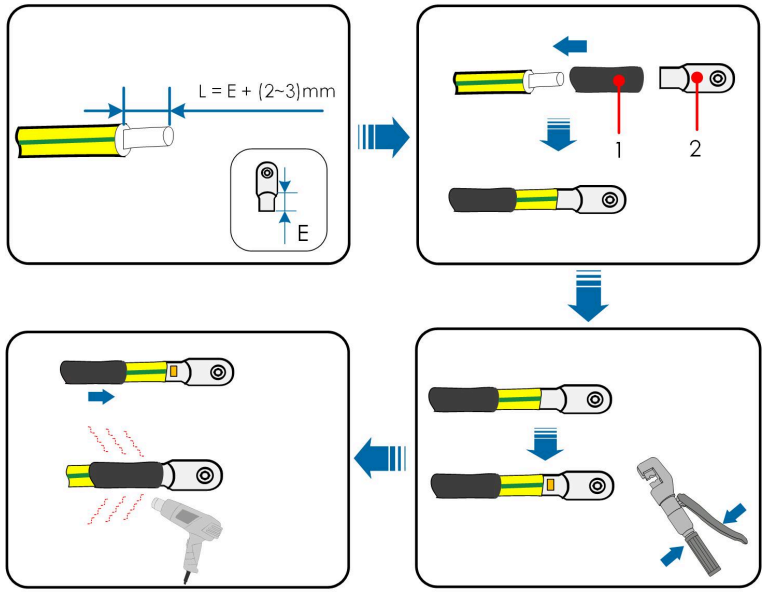

(1) Heat shrink tubing (2) OT/DT terminal

2. Remove the screw from the PE terminal. Position the cable, fit the screw back, and fasten the cable using a screwdriver.

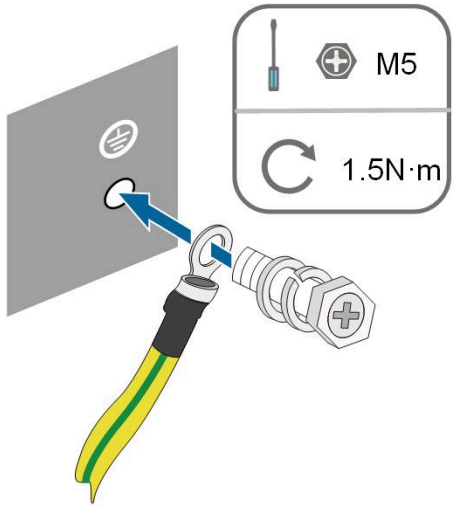

3. Apply silicone or painting to the PE terminal for corrosion protection.

Disconnect the grounding cable

Remove the screw from the PE terminal, and move the cable away.

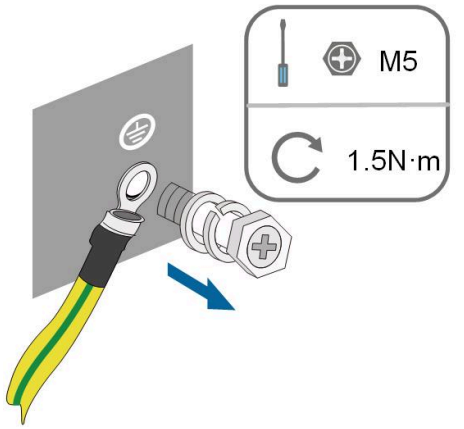

5.5 DC Cable Connection

5.5.1 Assemble DC Connectors

The DC cables are connected to the battery system on one side and to the inverter on the other side, as shown in the figure below.



Assemble the cold-pressed terminal for connection on battery side

The dimensions of the cold-pressed terminal are shown in the figure below.

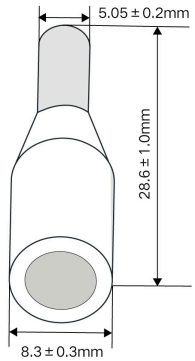

Remove the insulation of the DC cable by approximately 18–20mm using a wire stripper. Insert the stripped cable into the cold-pressed terminal, and crimp it using a crimping tool.

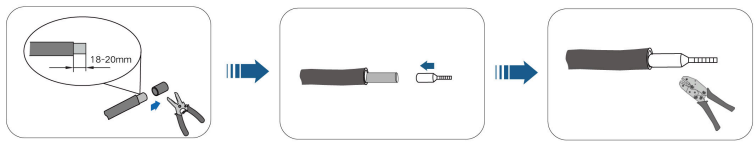

Assemble the connectors for battery connection on inverter side

1. Remove the insulation of the DC cables, both by approximately 15mm.

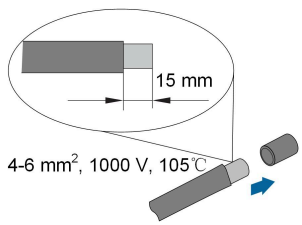

2. Remove the swivel nuts from the connectors.

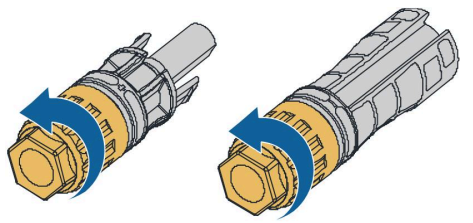

3. Crimp the corresponding wiring terminals on the cable wires using a crimping tool.

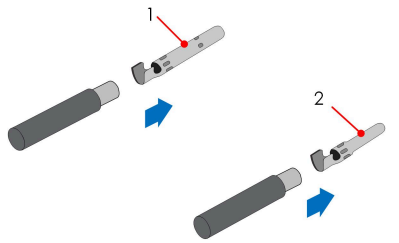

1: Positive cold-pressed terminal 2: Negative cold-pressed terminal

4. Lead the cables through the cable glands, and insert them into the insulators respectively until they snap into place. Pull gently the cables backward to make sure the connection is secure.

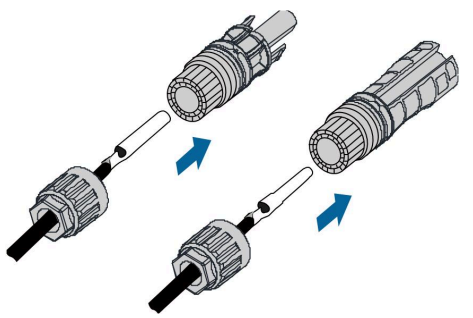

5. Fit the swivel nuts onto the connectors and tighten them. Pull gently the cables backward to make sure the connection is secure.

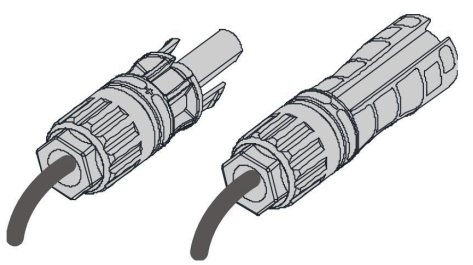

5.5.2 DC Cable Connection and Disconnection

Connect the DC cables

1. Remove the dust cover from the port for DC cable connection.

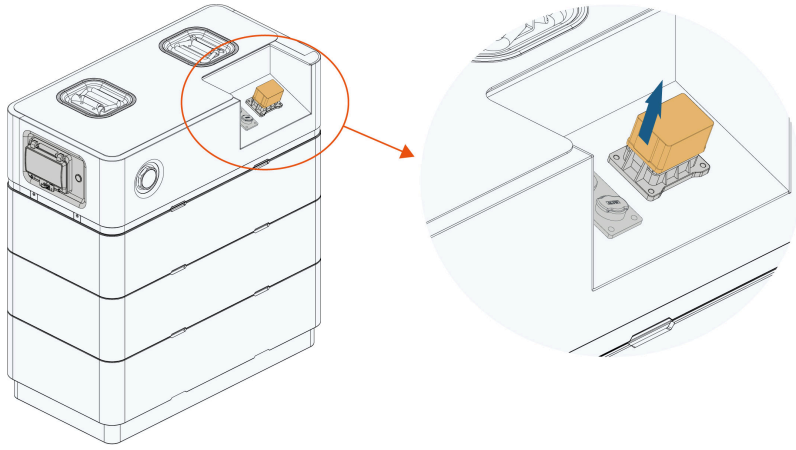

2. On the battery side, lead the DC cables through the power connector.

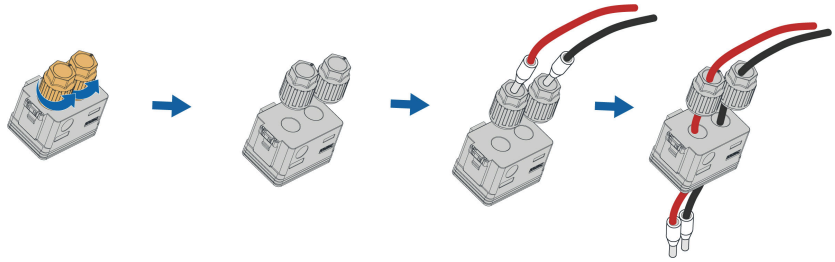

3. Insert the slotted screwdriver straight into the DC port, and press down on the screwdriver. The cable terminals can now be inserted into the corresponding ports. Release the pressure on the screwdriver, and the DC cables will be secured automatically.

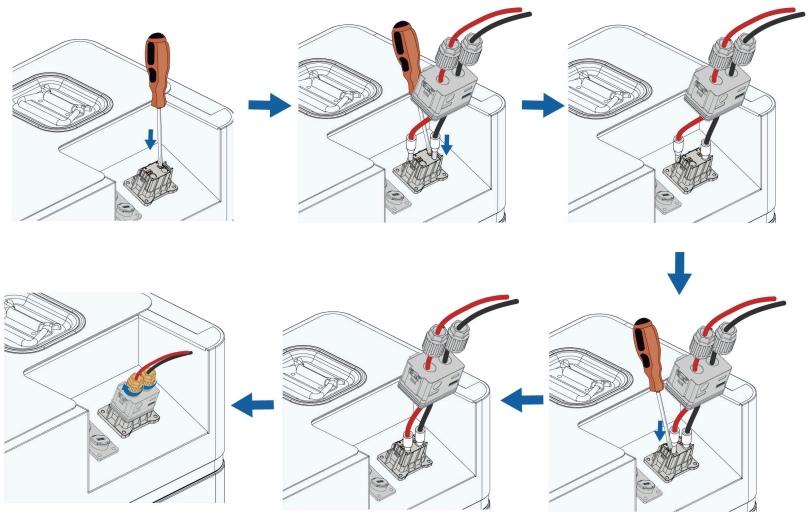

4. Fix the power connector with screws.

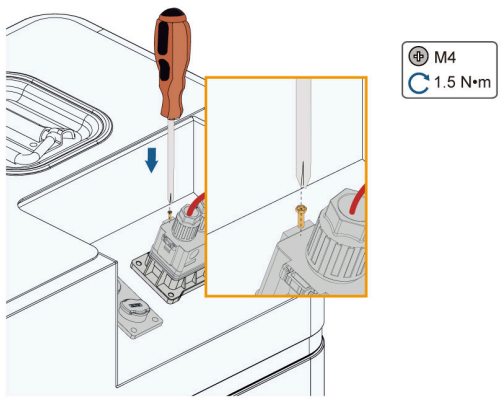

5. On the inverter side, connect the connectors of the DC cables to the corresponding BAT terminals of the inverter, and make sure they "click" into place.

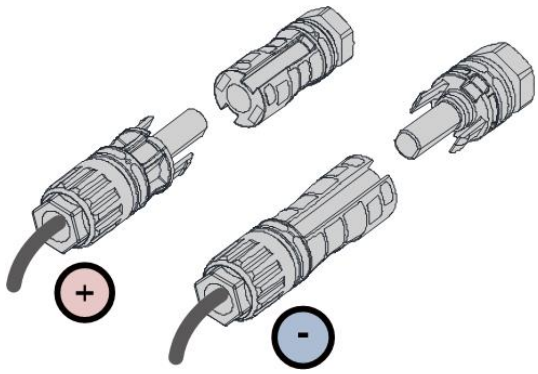

6. Pull gently the DC cables backward to check whether the connection is secure.

Disconnect the DC cables

NOTICE

Check whether the system is powered, or let it stand for a while before disconnecting the cables.

1. Remove the fixing screws from the power connector.

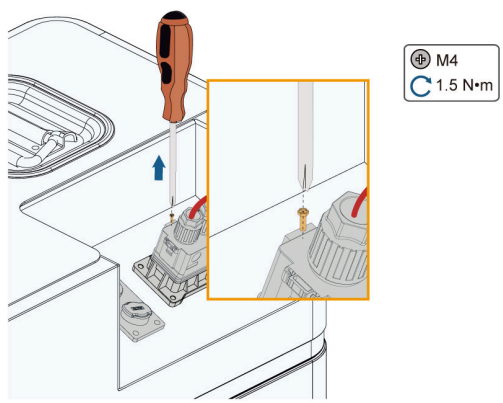

2. Rotate anticlockwise the waterproof terminals at the end of the connector.

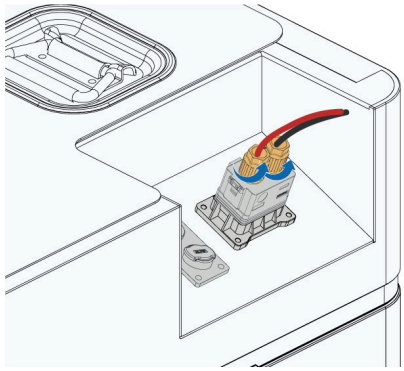

3. On the battery side, pull the DC cables out directly.

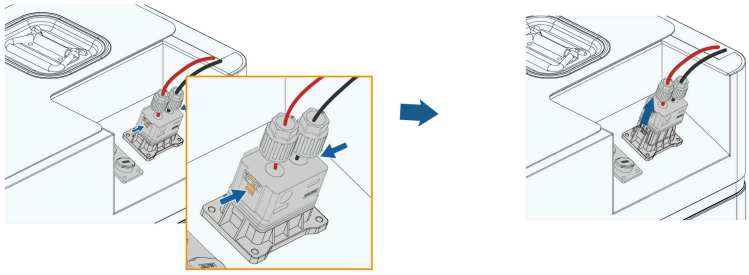

4. On the inverter side, loosen the locking element of the connector with a dismantling wrench, and fit the waterproof plug.

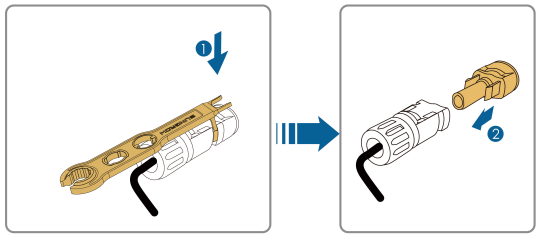

5.6 Communication Cable Connection

5.6.1 Assemble Communication Connectors and Termination Resistor

The communication cable is connected to the battery system on one side and to the inverter on another side, as shown in the figure below.



RACK Inverter

Assemble the communication connector for connection on battery side

1. Unscrew the swivel bolt from the communication connector, and remove the rubber washer inside.

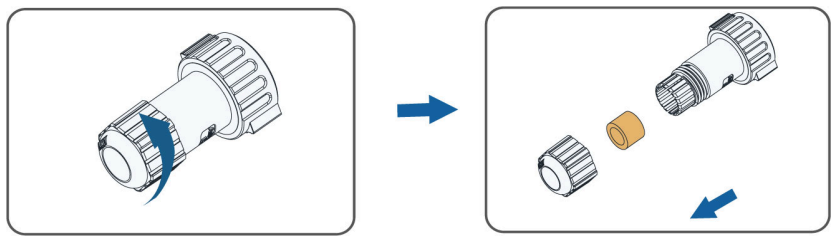

2. Lead the communication cable through the communication connector, and remove the insulation of the cable from one side by approximately 10-15mm.

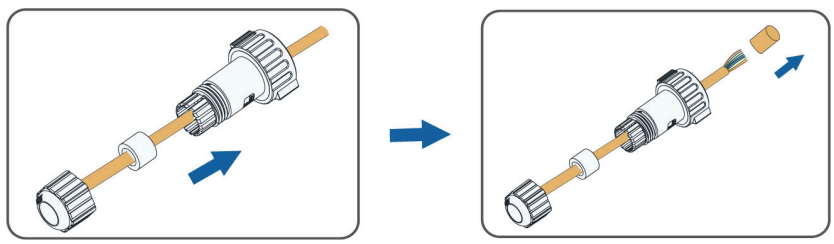

3. Attach the RJ45 connector, and crimp it using the RJ45 crimping tool.

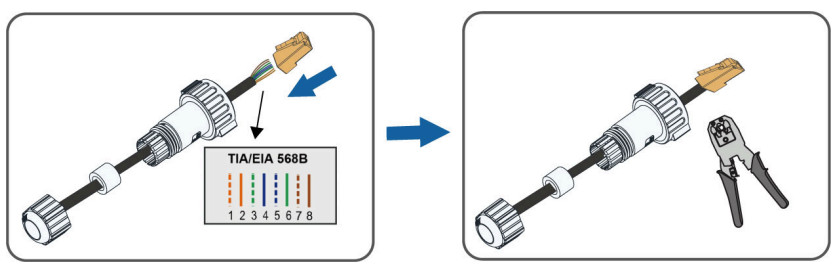

4. Put the rubber washer back, and then tighten the bolt.

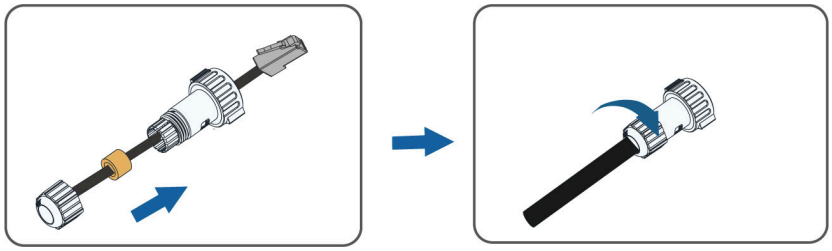

Assemble the wiring terminal for connection on inverter side

1. Remove the insulation of the communication cable from the other side. Keep signal wires CAN1_H (orange-white wire) and CAN1_L (orange wire), and cut off the unused signal wires.

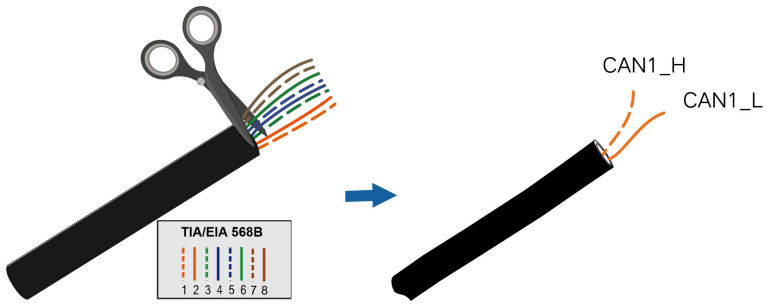

2. Remove the insulation of the signal wires, both by 12mm.

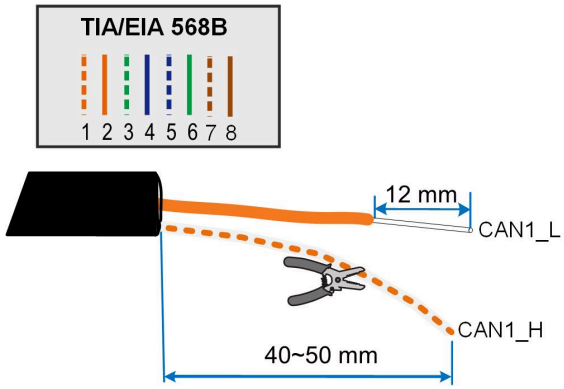

3. Insert the stripped wires into the corresponding cold-pressed terminals, and crimp them using a crimping tool.

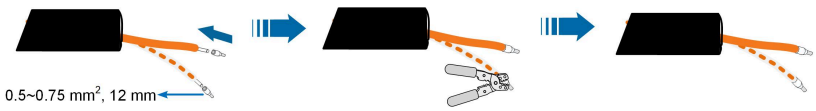

Install the termination resistor

To improve the communication quality of the battery system, a termination resistor should be connected to the COM IN port on the switch gear. The installation process is illustrated as follows.

Fit the termination resistor into the communication connector.

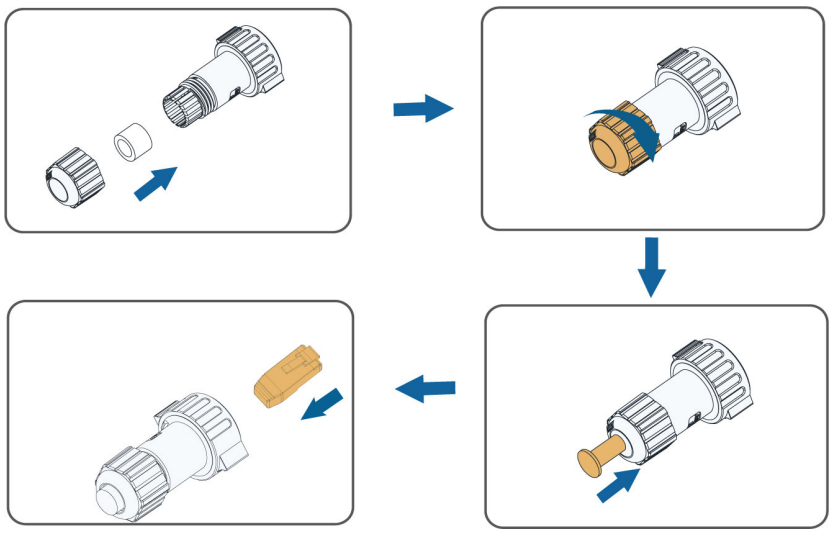

5.6.2 Communication Cable Connection and Disconnection

Connect the communication cable

1. Remove the waterproof plug from the COM port of the battery.

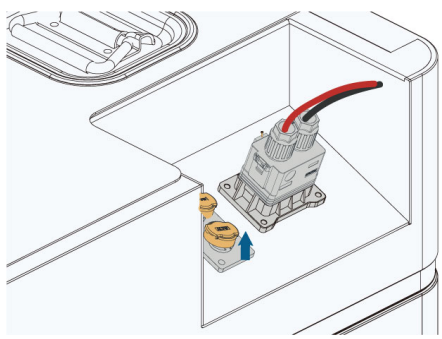

2. Insert the communication cable and the termination resistor respectively into the OUT and IN ports of the communication terminal, and make sure they "click" into place.

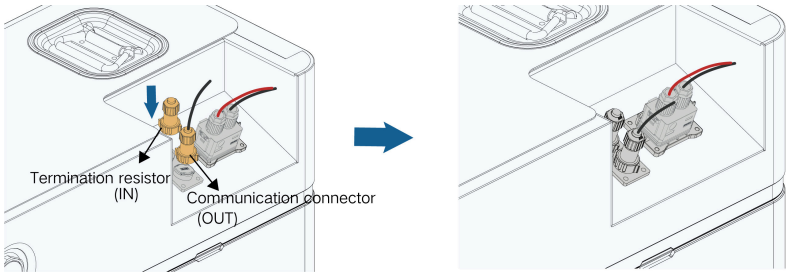

Be sure to install a termination resistor, otherwise, the battery communication cannot be enabled.

3. Connect the other side of the communication cable to the H and L of the COM port of the inverter.

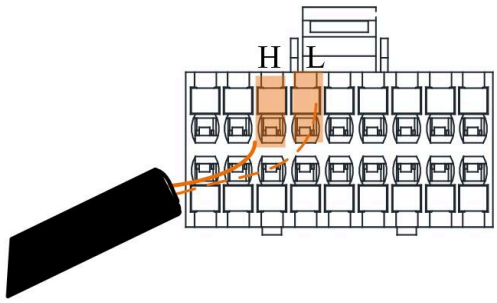

Disconnect the communication cable

1. Pull the communication connector out of the COM port of the battery.

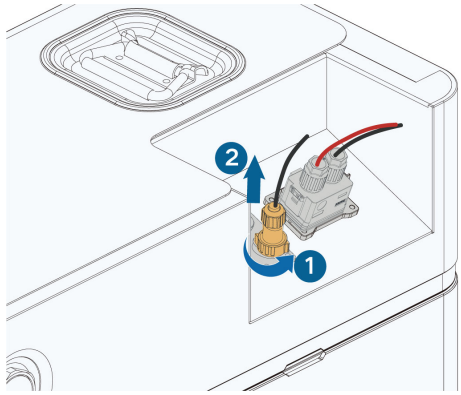

2. Fit the waterproof plug.

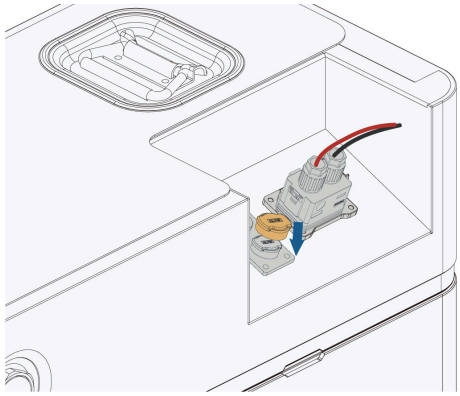

Remove the termination resistor

1. Pull the termination resistor out of the COM port of the battery.

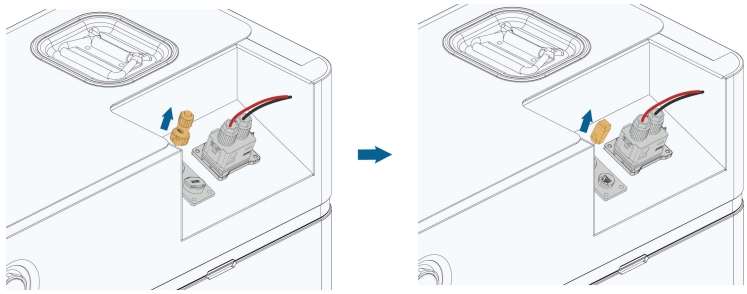

2. Fit the waterproof plug.

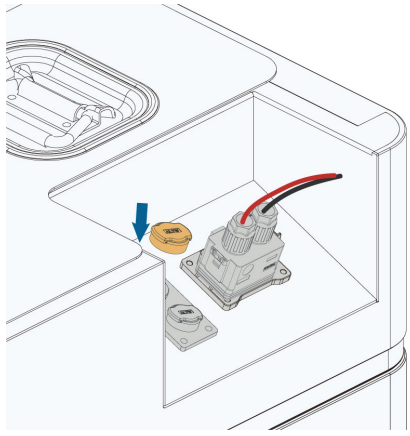

5.7 Top Cover Assembling

Assemble the top cover after the electrical connection is completed and the cables are confirmed to be correctly and firmly connected.

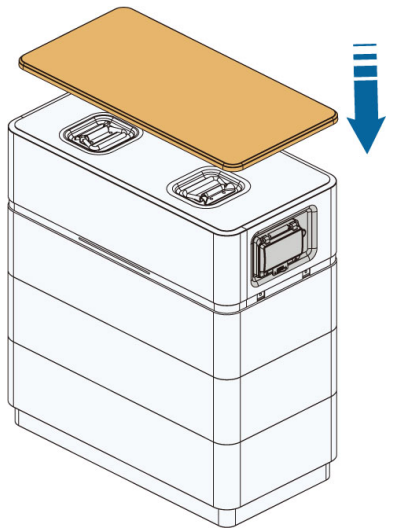

5.8 Battery Cascading

RACKs (battery systems) can be connected in parallel, allowing for at most 4 RACKs to be cascaded. Please make sure the usable energy of each RACK is the same when cascading the RACKs.

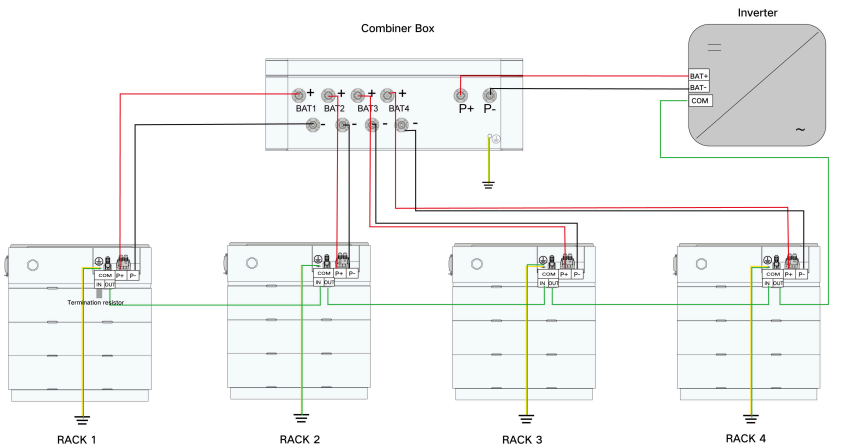

figure 5-2 Battery Cascading Diagram

6 Commissioning/Startup Procedure

6.1 Inspection before Commissioning

Check the following items before starting the battery:

- Check that the battery system has been installed completely.
- Check that the appearance of the battery system is intact.
- Check that the battery system output wiring harness is correctly connected to the positive and negative terminals of the battery and hybrid inverter to avoid misconnection and reverse connection.
- If a combiner box is used, check whether the connection between the battery and the combiner box and the connection between the combiner box and the hybrid inverter is complete, and whether the positive and negative terminals are correctly connected. (Combiner box not sale in EU)

6.2 Commissioning Procedure

If the requirements of the inspection items above are all met, please proceed with the following steps to start the battery system for the first time.

Open the protective cover of the DC circuit breaker, and pull the switch up. The status indicator then blinks blue. When the indicator is steady blue, it indicates that the battery system has been powered on and is working normally.

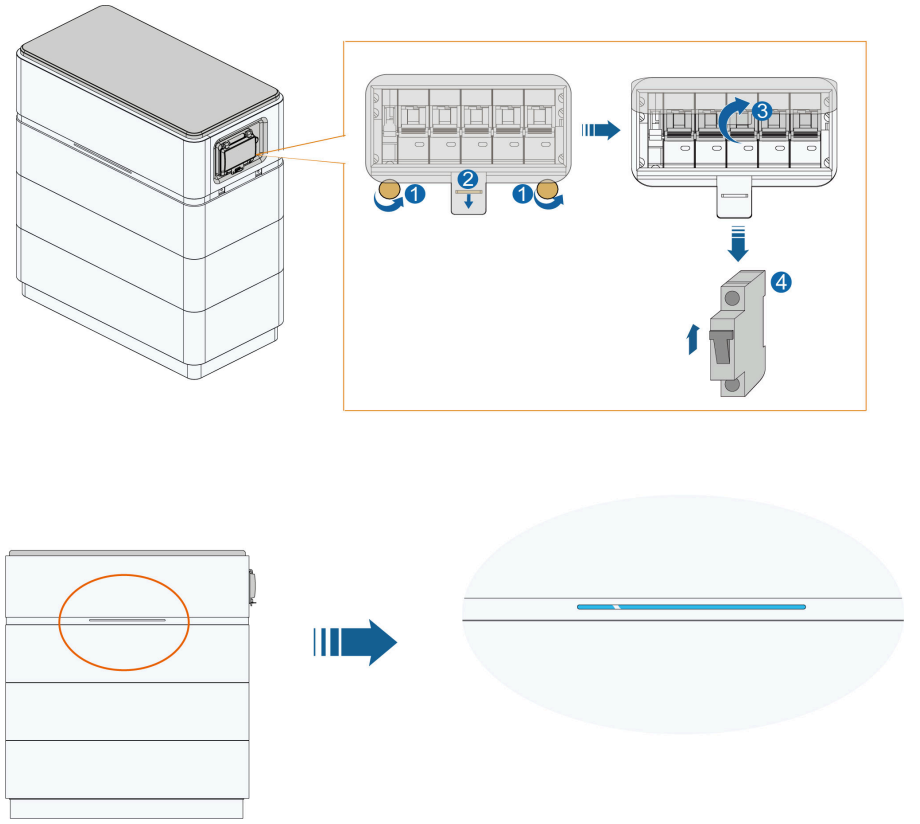

Please refer to 2.4 LED Indicators for the description of LED indicator status.

It is required to press the black start button at the first start-up of the system.

7 Battery Decommissioning/Shutdown Procedure

The battery in the system should be decommissioned once the hybrid inverter is out of service. Proceed with the following steps to decommission the battery.

step 1 Shut off the DC circuit breaker of the battery system.

step 2 One minute after the DC circuit breaker is shut off, disconnect and remove the power cables and communication cable.

- - End

Contact SUNGROW for battery disposal.

8 Viewing Battery information

NOTICE

If you want to check battery information, please complete the plant creation in iSolarCloud first. For details on how to create a plant in iSolarCloud, please refer to *iSolarCloud App User Manual* , which can be obtained by scanning the following QR code.

Viewing Battery information on iSolarcloud App

1. Log in to the iSolarCloud App, tap **Overview**, the battery charging energy from PV then be displayed.

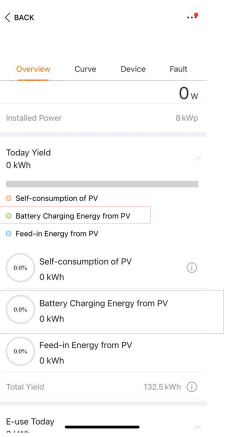

2. Tap **Device**, Tap **Battery**,Battery parameters then be consulted。

Device information：Basic information about the battery device。

Other information：Basic information about battery operating parameters。

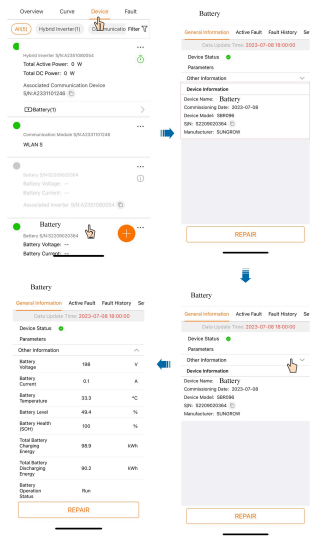

Viewing Battery information on iSolarcloud Web

1. Log in to the iSolarCloud Web, tap **Overview**, the battery charging energy from PV then be displayed.

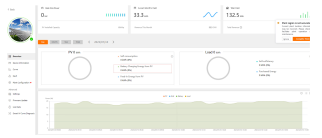

2. Tap **Device information**, Tap **Battery**,Battery parameters then be consulted。

Device information：Basic information about the battery device。

Other information：Basic information about battery operating parameters。

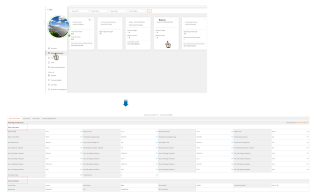

9 Battery Augmentation

Battery charging and discharging may take a long time. Therefore, before adding a new PACK, please refer to the document *Brief Introduction of Battery Augmentation* on https://support.sungrowpower.com/ and charge/discharge the on-site battery system via remote control, so as to prevent the installer from waiting on site.

⚠ WARNING

Before adding a new PACK, be sure to charge/discharge the on-site battery system via iSolarCloud App according to the document mentioned above. After the settings are completed successfully, battery charging/discharging will start automatically, until the SOC of the battery on site is the same as that of the PACK to be added. Otherwise, the battery system may not work normally after the new PACK is added, and the problems arising therefrom will not be covered by warranty.

10 Troubleshooting and Maintenance

10.1 Troubleshooting

Fault Name	Fault Code	Corrective Measure
Battery fault	703, 711, 712, 715, 717	1. Generally, the fault will disappear by itself within 20 min. 2. In the event of continual and frequent occurrence of this fault, please switch off the battery system, and contact the installer or manufacturer to check whether the inverter is damaged. 3. Please contact the installer or the manufacturer if the issue persists for a long time. Switch off the battery system immediately if the SOC drops below 3% to avoid damage caused by battery over-discharge.
	707, 733	1. Check whether there is a heat source near the battery system, and measure the ambient temperature. The operating temperature range of the battery system is 0 to 55℃ for charging, and -20 to 55℃ for discharging. Please check whether the ambient temperature or the battery temperature goes beyond this range. In case the battery is placed near a heat source or in an unventilated environment, or the ambient temperature is too high, please improve the installation environment for the battery system. 2. Please contact the installer or the manufacturer if the issue persists for a long time. Switch off the battery system immediately if the SOC drops below 3% to avoid damage caused by battery over-discharge.

Fault Name	Fault Code	Corrective Measure
	708, 734	1. The operating temperature range of the battery system is 0 to 55℃ for charging, and -20 to 55℃ for discharging. Please check whether the ambient temperature or the battery temperature falls below this range. In case the ambient temperature is too low, please improve the installation environment for the battery system. 2. Please contact the installer or the manufacturer if the issue persists for a long time. Switch off the battery system immediately if the SOC drops below 3% to avoid damage caused by battery over-discharge.
	714	1. Check whether the communication cable between the battery and the inverter is incorrectly or loosely connected. 2. Replace the communication cable if the problem is not resolved. 3. Please contact the installer or the manufacturer if the issue persists for a long time. Switch off the battery system immediately if the SOC drops below 3% to avoid damage caused by battery over-discharge.
	732	1. Please contact the installer or manufacturer to upgrade the hybrid inverter, WiNet, and battery software to the latest version. 2. Please contact the installer or the manufacturer if the issue persists for a long time. Switch off the battery system immediately if the SOC drops below 3% to avoid damage caused by battery over-discharge.
	735, 736, 737	1. Generally, the battery will return to normal automatically; 2. If the problem is not resolved, switch off the battery system, and restart it after 5 minutes. 3. Please contact the installer or the manufacturer if the issue persists for a long time. Switch off the battery system immediately if the SOC drops below 3% to avoid damage caused by battery over-discharge.

Fault Name	Fault Code	Corrective Measure
	739	1. Switch off the battery system, and restart it after 5 minutes. 2. Please contact the installer or the manufacturer if the issue persists for a long time. Switch off the battery system immediately if the SOC drops below 3% to avoid damage caused by battery over-discharge.
	740	1. Check whether the client RACK is incorrectly or loosely connected. Switch off the battery, and restart it after 5 minutes. 2. Please contact the installer or the manufacturer if the issue persists for a long time. Switch off the battery system immediately if the SOC drops below 3% to avoid damage caused by battery over-discharge.
	741	1. Please contact the installer or manufacturer to upgrade the hybrid inverter, WiNet, and battery software to the latest version. 2. If the problem is not resolved, please check whether the system configuration is correct (SUNGROW single-phase hybrid inverter used with battery system consisting of 2~6 PACKs; SUNGROW three-phase hybrid inverter used with battery system consisting of 3~8 PACKs). 3. Please contact the installer or the manufacturer if the issue persists for a long time. Switch off the battery system immediately if the SOC drops below 3% to avoid damage caused by battery over-discharge.
	742	1. Please check whether the power cables are connected in inverse or poorly connected. 2. Please contact the installer or the manufacturer if the issue persists for a long time. Switch off the battery system immediately if the SOC drops below 3% to avoid damage caused by battery over-discharge.

Fault Name	Fault Code	Corrective Measure
	743, 744, 745	1. Generally, the battery will return to normal automatically; 2. If the problem is not resolved, please upgrade the battery software. 3. Please contact the installer or the manufacturer if the issue persists for a long time. Switch off the battery system immediately if the SOC drops below 3% to avoid damage caused by battery over-discharge.
	746	1. Please contact the installer or manufacturer to upgrade the hybrid inverter, WiNet, and battery software to the latest version. 2. If the problem is not resolved, please contact the installer to change the order of PACKs and re-install the battery system. 3. Please contact the installer or the manufacturer if the issue persists for a long time. Switch off the battery system immediately if the SOC drops below 3% to avoid damage caused by battery over-discharge.
	747	1. Switch off the battery system, and restart it after 5 minutes. 2. If the problem is not resolved, please upgrade the battery software. 3. Please contact the installer or the manufacturer if the issue persists for a long time. Switch off the battery system immediately if the SOC drops below 3% to avoid damage caused by battery over-discharge.

Fault Name	Fault Code	Corrective Measure
Battery alarm	833	1. Please contact the installer or manufacturer to upgrade the hybrid inverter, WiNet, and battery software to the latest version. 2. If the problem is not resolved, please check whether the system configuration is correct (SUNGROW single-phase hybrid inverter used with battery system consisting of 2~6 PACKs; SUNGROW three-phase hybrid inverter used with battery system consisting of 3~8 PACKs). 3. If the problem is not resolved, please contact the installer to change the order of PACKs and re-install the battery system. 4. Please contact the installer or the manufacturer if the issue persists for a long time. Switch off the battery system immediately if the SOC drops below 3% to avoid damage caused by battery over-discharge.
	932, 939, 964	1. Generally, the battery will return to normal automatically. 2. Please contact the installer or the manufacturer if the issue remains unresolved for a long term. Turn off the battery immediately if the SOC drops below 3% to avoid damage caused by battery over-discharge..
	937, 941, 942	1. Generally, the battery will return to normal automatically. 2. If the problem is not resolved, please upgrade the battery software. 3. Please contact the installer or the manufacturer if the issue remains unresolved for a long term. Turn off the battery immediately if the SOC drops below 3% to avoid damage caused by battery over-discharge..

Fault Name	Fault Code	Corrective Measure
	933	1. Check whether there is a heat source near the battery system, and measure the ambient temperature. The operating temperature range of the battery system is 0 to 55℃ for charging, and -20 to 55℃ for discharging. Please check whether the ambient temperature or the battery temperature goes beyond this range. In case the battery is placed near a heat source or in an unventilated environment, or the ambient temperature is too high, please improve the installation environment for the battery system. 2. Please contact the installer or the manufacturer if the issue persists for a long time. Switch off the battery system immediately if the SOC drops below 3% to avoid damage caused by battery over-discharge.
	934	1. The operating temperature range of the battery system is 0 to 55℃ for charging, and -20 to 55℃ for discharging. Please check whether the ambient temperature or the battery temperature falls below this range. In case the ambient temperature is too low, please improve the installation environment for the battery system. 2. Please contact the installer or the manufacturer if the issue persists for a long time. Switch off the battery system immediately if the SOC drops below 3% to avoid damage caused by battery over-discharge.
	935	1. Generally, the battery will return to normal automatically. 2. If the problem is not resolved, switch off the battery system, and restart it after 5 minutes. 3. Please contact the installer or the manufacturer if the issue remains unresolved for a long term. Turn off the battery immediately if the SOC drops below 3% to avoid damage caused by battery over-discharge..

10.2 Maintenance

NOTICE

Please contact SUNGROW when adding any new PACK for capacity expansion, and perform the operation following the instructions provided by SUNGROW. Otherwise, the system performance may be affected, and the system may not be able to work normally.

The recommended maintenance intervals are listed as follows, which however should be adjusted according to the actual installation environment.

The maintenance interval of the product is subject to factors such as power plant size, location, and site conditions. It is necessary to shorten the interval and increase the frequency of maintenance for products working in sandy or dusty environments.

Items to be inspected once a year

Inspection item	Inspection method
PACK status and cleanliness	The following items should be inspected. Take corrective actions immediately for items that fail the inspection: • Check if there is any damage to or deformation of the PACK and its internal components. • Check if the internal components make abnormal noises during running. • Check if the temperature inside the RACK goes too high. • Check if the humidity and the amount of dust inside the PACK are in the normal range. Clean the PACK if necessary.
Warning signs	Check if warning labels and signs are legible and clean. Clean them if necessary.
Cable	Check if the switch gear is correctly connected to the hybrid inverter.
Corrosion	Check if the PACK has oxidized or rusted inside.

Items to be inspected every six months

Inspection item	Inspection method
Switch gear and PACKs	The following items should be inspected. Take corrective actions immediately for items that fail the inspection: • Check if there are flammables near the PACKs. • Check if the PACK is firmly fixed on the wall, and if the fixing points are rusted or corroded. • Inspect the switch gear and the PACKs for any damage, paint peeling-off, oxidation, etc.
Wiring and cable laying	Do not perform any inspection unless all the components inside the PACKs are powered off. Take corrective actions immediately for items that fail the inspection during the inspection process • Check whether the cables are laid in compliance with relevant standards without short-circuit. Take corrective actions immediately for anything abnormal. • Check if water has penetrated into the PACKs. • Check if the cable is loosely connected. If so, fasten it at the required torque.
Grounding	Check if the system is correctly grounded.
Functions	Check if the current, voltage, and temperature of the PACKs are in the normal range.

NOTICE

Battery capacity auto-calibration is available, however only when SUNGROW hybrid inverters are used.

11 Appendix

11.1 Technical Data

table 11-1 Technical parameters of high voltage LFP battery(SBH100 / SBH150 / SBH200 / SBH250).

Parameters	SBH100	SBH150	SBH200	SBH250
Technical properties	2 modules	3 modules	4 modules	5 modules
System Data				
Battery Type	LiFePO4 Prismatic Cell			
Battery Module	5.0kWh, 46kg			
Energy (usable) [1]	10.0kWh	15.0kWh	20.0kWh	25.0kWh
Nominal voltage	140.8 V	211.2 V	281.6 V	352.0 V
Operating voltage	118.8~160.6V	178.2~240.9V	237.6~321.2V	297~401.5V
Rated DC power	7.04 kW	10.56 kW	14.08 kW	17.60 kW
Max. charging / discharging current: continuous	50 A			
Depth of discharge	Max. 100%DOD (settable)			
Short circuit current	3900A			
Display	SOC indicator, Status indicator			
Communication interface	CAN			
Protection				
Over / under voltage protection	Yes			

Parameters	SBH100	SBH150	SBH200	SBH250
Over current protection	Yes			
Over / under temperature protection	Yes			
DC breaker	Yes			
General Data				
Dimensions (W*H*D)	675*580*350 mm	675*740*350 mm	675*900*350 mm	675*1060*350 mm
Weight	108 kg	154 kg	200 kg	246 kg
Installation location	Indoor / Outdoor			
Mounting method	Floor stand			
Operating temperature	Charge: 0 to 55℃ Discharge: -20 to 55℃			
Degree of protection	IP55			
Allowable relative humidity range	0% to 95% no condensing			
Max. operating altitude	Max. 2000 m			
Cooling method	Natural convection			
Warranty[2]	10 Years			

1: Test conditions: 25℃, 100% depth of discharge (DOD), 0.2C charge discharge.

2: Refer to battery warranty letter for conditional application.

table 11-2 Technical parameters of high voltage LFP battery(SBH300 / SBH350 / SBH400).

Parameters	SBH300	SBH350	SBH400
Technical properties	6 modules	7 modules	8 modules
System Data			

Parameters	SBH300	SBH350	SBH400
Battery Type	LiFePO4 Prismatic Cell		
Battery Module	5.0kWh, 46kg		
Energy (usable)[1]	30.0kWh	35.0kWh	40.0kWh
Nominal voltage	422.4 V	492.8 V	563.2 V
Operating voltage	356.4 V~481.8 V	415.8 V~562.1 V	475.2 V~642.4 V
Rated DC power	21.12 kW	24.64 kW	28.16 kW
Max. charging / discharging current: continuous	50 A		
Depth of Discharge	Max. 100% DOD(settable)		
Short circuit current	3900A		
Display	SOC indicator, Status indicator		
Communication interface	CAN		
Protection			
Over / under voltage protection	Yes		
Over current protection	Yes		
Over / under temperature protection	Yes		
DC breaker	Yes		
General Data			
Dimensions (W*H*D)	675*1220*350mm	675*1380*350mm	675*1540*350mm
Weight	292kg	338kg	384kg

Parameters	SBH300	SBH350	SBH400
Installation location	Indoor / Outdoor		
Mounting method	Floor stand		
Operating temperature	Charge: 0 to 55℃ Discharge: -20 to 55℃		
Degree of protection	IP55		
Allowable relative humidity range	0% to 95% no condensing		
Max. operating altitude	Max. 2000 m		
Cooling method	Natural convection		
Warranty[2]	10 Years		

1: Test conditions: 25℃, 100% depth of discharge (DOD), 0.2C charge discharge.

2: Refer to battery warranty letter for conditional application.

11.2 FAQs

11.2.1 Battery Not Charging

1. Please wait 5~10 minutes for data refresh of iSolarCloud App.

2. If the problem persists, try charging the battery by enabling force mode. If the battery can be charged now, please contact the hybrid inverter installer or manufacturer.

3. Check if the current battery SOC is the same as the set SOC upper limit of the hybrid inverter. Once the battery SOC reaches or goes beyond the SOC upper limit, the battery cannot be charged (please set the value to 50~100 as needed).

4. If the problem is still not resolved, please check the system for any faults and take countermeasures according to the fault code.

5. If the problem is still not resolved, check whether the ambient temperature is near or below 0℃. Switch off the battery in the event of the temperature falling below 0℃, and restart and charge it when the temperature rises up to over 5℃.

6. If the problem persists, check whether there is a heat source near the battery and whether the ambient temperature goes higher than 55°C. Switch off the battery in the event of the temperature exceeding 55°C, and restart and charge it when the temperature falls below 40°C.

7. Contact the installer or manufacturer if the problem can still not be resolved. Switch off the battery immediately once the SOC drops below 3%.

11.2.2 Battery Not Discharging

1. Please wait 5-10 minutes for data refresh of iSolarCloud App.

2. If the problem persists, try discharging the battery by enabling force mode. If the battery can discharge now, please contact the hybrid inverter installer or manufacturer.

3. Check if the current battery SOC is the same as the set SOC lower limit of the hybrid inverter. Once the battery SOC reaches or falls below the SOC lower limit, the battery will not discharge (please set the value to 5-50 as needed).

4. If the problem is still not resolved, please check the system for any faults and take countermeasures according to the fault code.

5. Check whether there is a heat source near the battery and whether the ambient temperature goes higher than 55°C. Switch off the battery in the case of the temperature exceeding 55°C, and restart and discharge it when the temperature falls below 40°C.

6. Contact the installer or manufacturer if the problem can still not be resolved. Switch off the battery immediately once the SOC drops below 3%.

11.2.3 SOC Jump

1. Occasional occurrence of SOC jump is considered to be a normal phenomenon, which does not affect the normal operation of the system.

2. In case the SOC jump issue occurs frequently, please contact the installer or manufacturer.

11.2.4 Battery Upgrade

1. Please contact the installer or manufacturer for iSolarCloud upgrade, if needed.

2. If the iSolarCloud is updated, please upgrade the software of the hybrid inverter, the communication module, and the battery at the same time. Otherwise, there may be problems arising from the mismatch of software versions.

3. Please contact the installer or manufacturer immediately in case of anything abnormal during or after the upgrade.

11.3 Quality Assurance

When product faults occur during the warranty period, SUNGROW will provide free service or replace the product with a new one.

Evidence

During the warranty period, the customer shall provide the product purchase invoice and date. In addition, the trademark on the product shall be undamaged and legible. Otherwise, SUNGROW has the right to refuse to honor the quality guarantee.

Conditions

- After replacement, unqualified products shall be processed by SUNGROW.
- The customer shall give SUNGROW a reasonable period to repair the faulty device.

Exclusion of Liability

In the following circumstances, SUNGROW has the right to refuse to honor the quality guarantee:

- The free warranty period for the whole machine/components has expired.
- The device is damaged during transport.
- The device is incorrectly installed, refitted, or used.
- The device operates in harsh conditions beyond those described in this manual.
- The fault or damage is caused by installation, repairs, modification, or disassembly performed by a service provider or personnel not from SUNGROW.
- The fault or damage is caused by the use of non-standard or non-SUNGROW components or software.
- The installation and use range are beyond stipulations of relevant international standards.
- The damage is caused by unexpected natural factors.

For faulty products in any of above cases, if the customer requests maintenance, paid maintenance service may be provided based on the judgment of SUNGROW.

Product data such as product dimensions are subject to change without prior notice. The latest documentation from SUNGROW should take precedence in case of any deviation.

11.4 Contact Information

In case of questions about this product, please contact us.

We need the following information to provide you the best assistance:

- Model of the device
- Serial number of the device
- Fault code/name
- Brief description of the problem

For detailed contact information, please visit: **https://en.sungrowpower.com/contactUS**

SUNGROW

Sungrow Power Supply Co., Ltd.
www.sungrowpower.com