powerESS Li.ON 51.2V-100Ah Battery

Operation and Maintenance Manual



SUNLIGHT

POWER IS KNOWLEDGE

EN

Operation and Maintenance Manual

Legal Provisions

This manual describes in detail the requirements and procedures for safe installation and operation of powerESS Li.ON battery pack. Please read this manual carefully, only qualified persons are allowed to install, operate and maintain the system, otherwise it may cause product damage or personal safety risks.

Any actions against safety operation, or do not follow rules of this manual and limited warranty letter, will void warranty and qualification of this product. Meanwhile, the manufacturer will be not responsible for the product damage, property damage, personal injury or even death.

The information contained in this manual is accurate when it's issued. Sunlight Group reserves the right to change specification (such as optimization, upgrade or other operations) without prior notice, please always view the latest document via QR code. In addition, please noted that the diagrams/schematics in this document are used to help understand system configuration and installation instructions, which may be different from the actual items at the installation.

Manual QR code

Legal Terms
Sunlight Group will retain the copyright of this document, do not extract, copy or translate in any ways without the written permission.

EN

Table of Contents

Legal Provisions		2
1.	Information	4
1.2	Target Group	4
1.3	Levels of Warning Messages	4
1.4	Symbol Description	4
1.5	Abbreviation Description	5
2.	Safety	5
2.1	Safety Precautions	5
2.2	Safety Instructions	6
3.	Product Overview	7
3.1	Introduction	7
3.2	Features	8
3.3	Specification	8
3.4	Protection Function	13
4	Installation	14
4.1	Preparation	14
4.2	Inspection	15
4.3	Start Installation	19
5.	Cable Connection and Commissioning	22
5.1	Get Battery Ready	22
5.2	Grounding Cable Connection	22
5.3	Communication Cable Connection	23
5.4	DC Power Cable Connection	23
5.5	Connecting with Inverter	23
5.6	Commissioning	28
5.7	Switch off Battery	28
6.	Troubleshooting and FAQ	29
7.	Transport, Storage	31
8.	Disposal of Battery	31
Connect with Victron GX & Inverter/Charger	Connect with SMA Inverter/Charger	32
Connect with Schneider Inverter/Charger	Connect with Studer Inverter/Charger	32
Connect with GOODWE Hybrid Inverter	Connect with Sol-Ark Hybrid Inverter	32
Connect with Growatt Inverter	Connect with Solis Inverter	33
Connect with Deye Hybrid Inverter	Connect with SUNSYNK Hybrid Inverter	33
Connect with SAJ Hybrid Inverter	Connect with LUXPOWER Inverter	33
Connect with Megarevo/INVT Inverter	Connect with MUST Inverter	34
Connect with Alpha & Outback Energy Inverter	Connect with Voltronic Inverter	34
Connect with Phocos Inverter	Connect with Mpp Solar Inverter	34

EN

1. Information

1.1 Validity

This document is valid for the powerESS Li.ON 51.2V-100Ah.

1.2 Target Group

This document is intended for qualified persons and operators. Only qualified persons are allowed to perform the activities marked in this document with a warning symbol and the caption "Qualified person".

Qualified persons must have the following skills:

- Knowledge of how lithium iron phosphate batteries work and are operated.
- Knowledge of how an energy storage system (including PV/battery/hybrid inverter, MPPT, Meter, Distribution box etc.) works and is operated.
- Knowledge of local applicable connection requirements, standards, and directives.
- Training in the installation and commissioning of electrical devices, batteries.
- Training in how to deal with the dangers and risks associated with installing, repairing and using electrical devices, batteries.

1.3 Levels of Warning Messages

- The following levels of warning messages may occur when handling the product

⚠ DANGER

Indicates a hazardous situation which, if not avoided, will result in death or serious injury.

⚠ WARNING

Indicates a hazardous situation which, if not avoided, could result in death or serious injury.

⚠ CAUTION

Indicates a hazardous situation which, if not avoided, could result in minor or moderate injury or product permanent damage.

⚠ NOTICE

Indicates a situation which, if not avoided, can result in property damage or product not working or accelerated product damage .

1.4 Symbol Description

1.4.1 Symbols on Products Label

Label	Definition
	Beware of electrical shock
	Do not place the battery within children/pet touchable area
	Do not place the battery near heat source and flammable material
	Do not expose the battery to direct sunlight, rain and snow
	Do not short circuit the battery
	The certificate label for IEC62619
	The UL1973 certificate label for Safety by Intertek
	The certificate label for European EMC directives
	The certificate label for U.K EMC directives
	Recycle label
	WEEE designation

1.4.1 Other Symbols

Label	Definition
⚠ Qualified person	Indicates activities that can only be performed by qualified persons
	Grounding point

EN

1.5 Abbreviation Description

Abbreviation	Definition
Battery/battery pack/ battery module	Single powerESS Li.ON rechargeable lithium iron phosphate battery pack including cells, BMS and enclosure etc.
Battery system/cluster	Multiple powerESS Li.ON battery pack connected in parallel with power, communication and grounding cables and installation auxiliaries.
BMS	Battery management system Electronical Unit to ensure lithium cells' safety and display information or control the battery work mode.
SOC	State of charge The battery state of charge refers to the percentage of the remaining capacity and rated capacity of the battery.
SOH	State of health The battery health status refers to the percentage between the full charged capacity and the rated capacity of the battery.
DIP switch	Dual in-line package switch
COCP	Charge over current protection
DOCP	Discharge over current protection
COVP	Cell over voltage protection
POVP	Pack over voltage protection
CHTP	Charge high temperature protection
DHTP	Discharge high temperature protection
CUVP	Cell under voltage protection
PUVP	Pack under voltage protection
CLTP	Charge high temperature protection
DLTP	Discharge high temperature protection
SCP	Short circuit protection

2. Safety

2.1 Safety Precautions

⚠ DANGER

Explosion risk
- Do not impact the battery with heavy objects.
- Do not squeeze or pierce the battery pack.
- Do not throw the battery pack into the fire.

⚠ CAUTION

Electric shock risk
- Do not allow non-qualified person to disassemble the battery pack.
- Do not touch the battery pack with wet hands.
- Do not expose the battery pack to moisture or liquid environment.

⚠ WARNING

Fire risk
- Do not expose the battery pack to the condition over 80°C.
- Do not put the battery near a heat source, such as a fireplace.
- Do not expose the battery pack to direct sunlight or raining.

⚠ NOTICE

Damage risk
- Do not short-circuit or reverse connect the battery.
- Do not use chargers or charging devices unapproved by the manufacturer to charge the battery.
- Do not mix batteries from different manufacturers or different kinds, types or brands.

EN

2.2 Safety Instructions

The battery has been designed and tested in accordance with international (such as UL, IEC, UN38.3 etc.) safety requirements. However, due to various factors during the whole lifetime process, Sunlight Group cannot guarantee absolute safety, to prevent personal injury and property damage and ensure long-term operation of the battery, please do read the below section carefully to operate the battery and handle emergency situations.

2.2.1 Safety Gear

It is required to wear the following safety gear when installing and handling the battery pack.



Insulated gloves



Safety Glasses



Safety Shoes

2.2.2 Emergency Safety Measures

Water invasion

Please cut off the AC power supply of the system first and then disconnect all switched under the premise of ensuring safety.

Electrolyte or gas leakage

If the battery pack leaks electrolyte, avoid contact with the leaking liquid or gas. If one is exposed to the leaked substance, immediately perform the actions described below.

- **Gas Inhalation:** Evacuate the people in the contaminated area and seek medical aid immediately.
- **Eye Contact:** Flush your eye with clean running water for 15 min and seek medical aid immediately.
- **Skin Contact:** Thoroughly rinse the exposed area with soap and water to be sure no chemical or soap is left on them and seek medical aid immediately.
- **Ingestion:** Induce vomiting and seek medical help immediately.

⚠ WARNING

In case of fire situations, please use carbon dioxide fire extinguisher rather than liquid to put out fires

2.2.3 Other Tips

- All the products are strictly inspected before shipment, please contact your supplier for replacement if you notice there's any defectives such as swelling.
- Do not disassemble batteries and components, otherwise the manufacturer will not be responsible for any damage caused by unauthorized disassembly or repair.
- Do enable the battery to be safely grounded before use to make sure the system in safe and normal operation.
- Please ensure that the electric parameters of these devices are compatible mutually before connecting the battery to other devices.
- Please take the environmental factors into careful considerations to ensure that the system can work in a suitable condition as the environment and storage methods have a certain impact on the service life and reliability of this product.

EN

3. Product Overview

3.1 Introduction

The powerESS Li.ON battery is a 51.2V lithium battery system, with BMS inside. It could be operated in both on-grid, back-up, and off-grid modes with compatible inverters. Below is the general schematic of an ac-coupled system with the batteries.

⚠ CAUTION

This electrical connection in this diagram is only for illustration, please follow the Manual suggestions of related devices and operate in accordance with locally applicable connection requirements, standards, and directives.

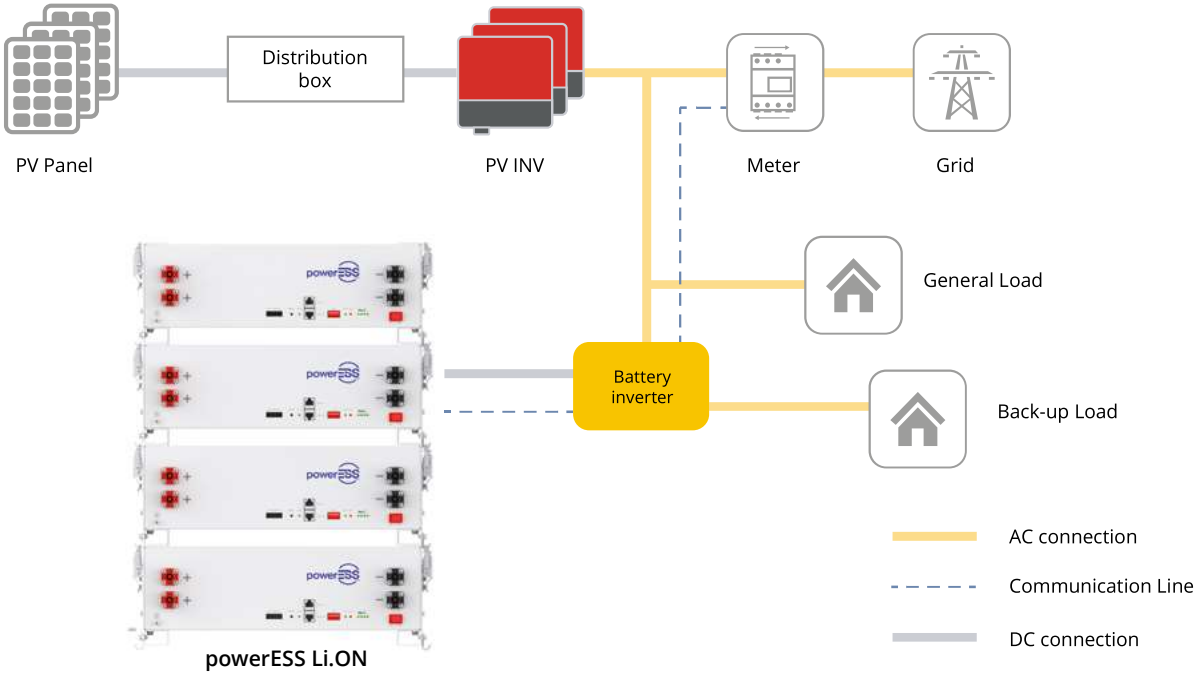

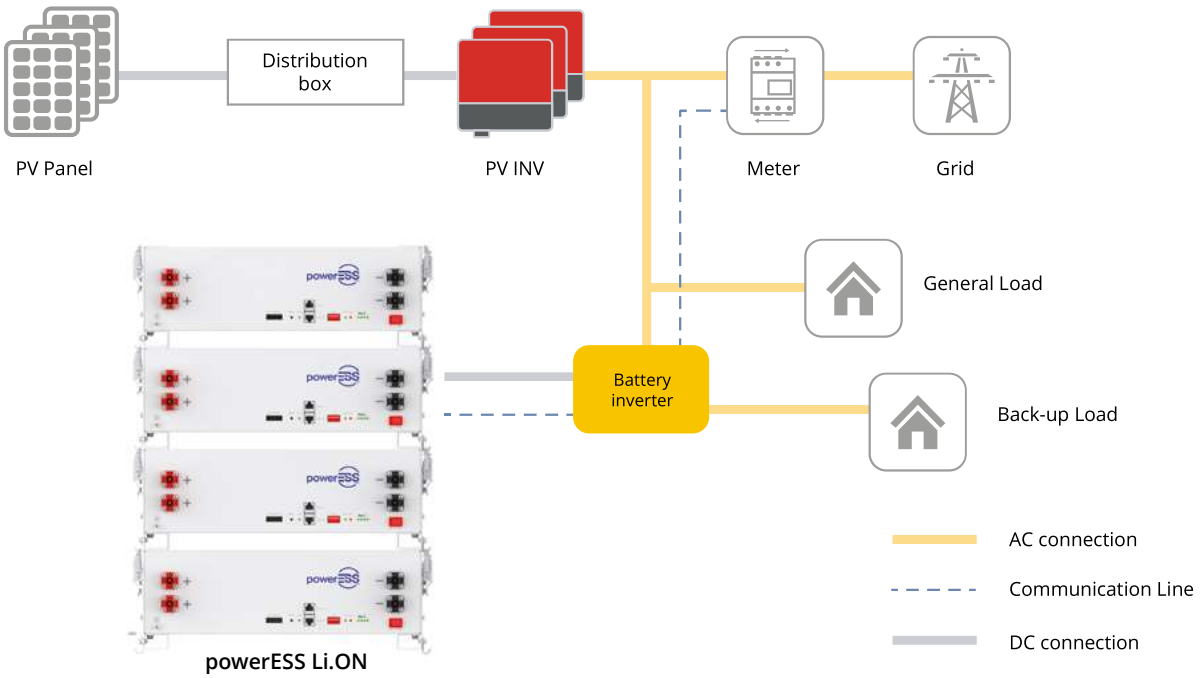

EN

3.2 Features

- Highest safety, battery is made from LiFePO4 chemistry and comply with highest international safety and transport standards.
- Modular and flexible, supports up to 32 batteries connect together to expand the system energy.
- Built-in pre-charge circuit to avoid rush current when connecting with different inverter/ chargers.
- Automatic dynamic addressing function when connected multiple batteries together.
- Support a maximum of 96% DOD under off-grid and back-up applications.
- Built in BMS provides warning and protection functions including over-discharged, over-charged, overcurrent, short-circuit and high/low temperature protection.
- LiFePO4 as cathode material and automatic balancing function to meet longer cycle life.
- Compact size and light weight for easy installation and maintenance.
- Multiple mounting options to adopt with different customer requirements.
- LED display, CAN/RS485 port for external communication and upgrade the BMS firmware.
- Rapid shut down function [for North American market.]

3.3 Specification

3.3.1 Dimension

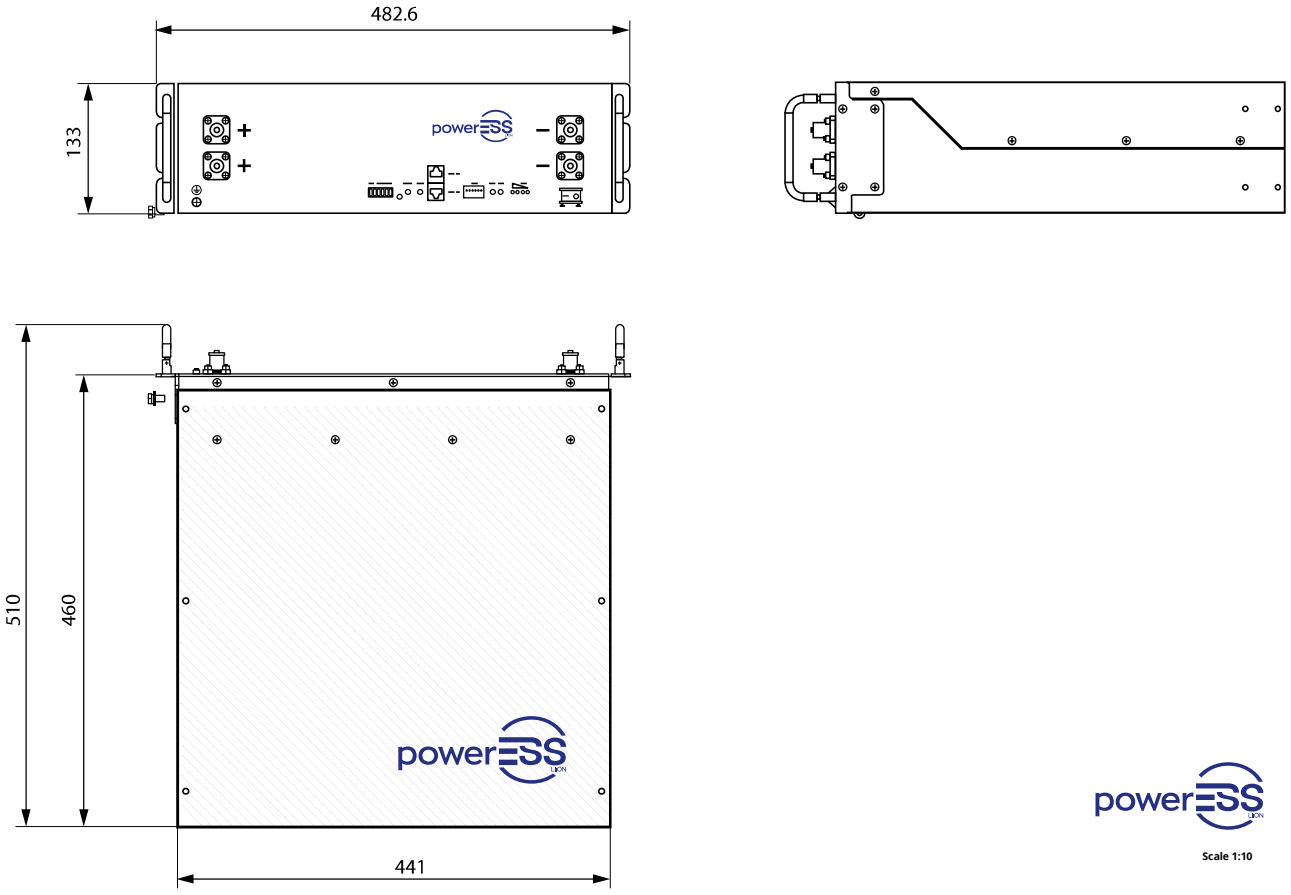

EN

3.3.2 Parameters

Items	powerESS Li.ON	
Rated voltage	51.2V	
Max. voltage range	44.8~57.6V, Shipping voltage>51.2V	
Charge voltage	56.0V	
Float charge voltage	54.6V	
Nominal energy@0.2C	5.12KWh	
Usable energy@0.2C	4.92kWh	
Nominal capacity@0.2C	100Ah	
Dimension	482*133.5*460mm (18.9*5.2*18.1 inch)	
Weight	~46kg (101lb)	
Standard charge current	≤50A	
Max. charge current	70A	
Standard discharge current	≤50A	
Max. discharge current	100A (initial temp. ≤30^{0}C)	
Peak discharge current	101~119A@5mins | 120~200A@15S	
Communication	RS485 /CAN	
Max parallel number	32pcs	
Operation temperature[1]	Charge: -5~50^{0}C Discharge:-10~50^{0}C	
Storage temperature @off mode	0^{0}C<T<30^{0}C	<6 months
	-10^{0}C<T<45^{0}C	<3 months
	Recommended environment	15~35^{0}C, 5~75%RH

NOTICE

The optimum operating temperature range is from 15°C to 30°C, Frequent exposure to the harsh temperatures may worsen the performance of the battery pack and cycle life.

3.3.3 Panel Interface

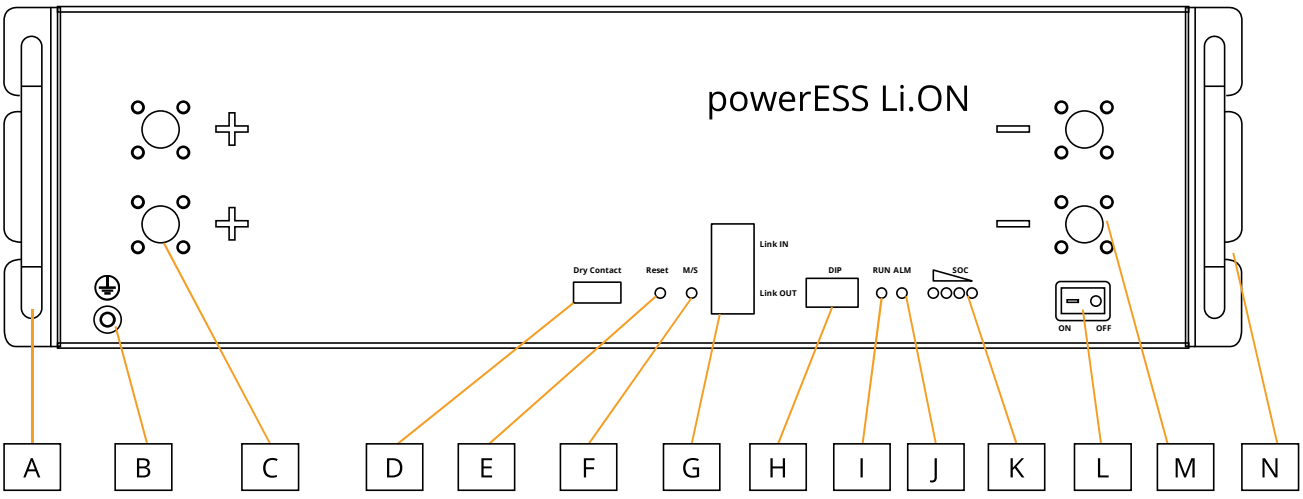

EN

No.	Items	Usage description	Remark
A	Handles	For handling, installation and disassembly of battery	
B	Grounding	Used to connect battery with ground	
C	Positive terminal	Used to connect the inverter/charger	
D	Dry contact	1 channel input signal 2 channels output signal	
E	Reset	Used to sleep(3s)/awake(3s)/reset(6~10s) BMS in power on mode.	
F	M/S	Used to indicate the module is Master or Slave battery	Single mode:OFF
			Parallel mode: ON- Master battery OFF-Slave battery
G	Link IN Link OUT	For internal and external communication	
H	DIP	Used to set the RS485 baud rate and inverter protocol choice	
I	RUN	Used to show that battery is in running status when lighting or flashing	
J	ALM	Used to show battery Alarm/Protection status	
K	SOC	Used to show battery real-time SOC	
L	Power switch	Used to Power on/off battery	
M	Negative terminal	Used to connect the inverter/charger	
N	Mounting ear	Used to fix with rack or cabinet	

3.3.3.1 D: Dry Contact

PIN	Type
1	NO Output1, Charge enable/disable passive signal
2	
3	NO Output2, discharge enable/disable passive signal
4	
5	Passive NO INPUT signal, connecting to Master when parallel connection. Rapid Shut Down function [for US market]
6	

EN

3.3.3.2 G: Link IN / Link OUT

Port	Pin No.	Definition	Remarks
Link IN	1	RS485-B1	1.Used to connect with external devices to establish communication. 2.Used to connect with upper battery pack Link OUT
	2	RS485-A1	
	3	SGND	
	4	CAN-H	
	5	CAN-L	
	6	SGND	
	7	RS485-A1	
	8	RS485-B1	
Link OUT	1	RS485-B2	Used to connect with downward battery pack Link IN.
	2	RS485-A2	
	3	SGND	
	4	CAN-H	
	5	CAN-L	
	6	SGND	
	7	RS485-A2	
	8	RS485-B2	

3.3.3.3: DIP Addressing

<table>
<tr><th colspan="8">DIP</th><th rowspan="3">Remarks</th></tr>
<tr><th colspan="2">RS485 baud rate</th><th colspan="4">Undefined</th><th colspan="2">Protocol</th></tr>
<tr><th>1</th><th colspan="2">2</th><th>3</th><th>4</th><th>5</th><th>6</th><th>7</th></tr>
<tr><td colspan="2">ON: 115200</td><td colspan="5" rowspan="4">Reserved for multiple cluster parallel and other future functions</td><td>0</td><td>0</td><td>Protocol ID0</td></tr>
<tr><td colspan="2">OFF: 9600</td><td>1</td><td>0</td><td>Protocol ID1</td></tr>
<tr><td colspan="2"></td><td>0</td><td>1</td><td>Protocol ID2</td></tr>
<tr><td colspan="2"></td><td>1</td><td>1</td><td>reserved</td></tr>
<tr><td colspan="2">Keep all batteries on the same setting</td><td colspan="5">Keep default settings</td><td colspan="2">Master: according to inverter brand
Slave: keep default setting</td></tr>
</table>

NOTE: Only master battery needs to set the Protocol ID, keep all slave batteries to default settings, after choosing the protocol ID, the battery will auto detect the inverter information and corresponding to get into running. Restart to take effect after setting new DIP sequence.

EN

Protocol ID	CANbus Connection	RS485 Connection	DIP setting (Master battery)
0	Victron/SMA/Studer Innotec/Sofar	Voltronic/MPP/Alpha outback/ Phocos/Kodak	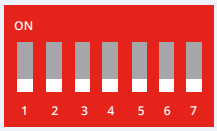 X000000
1	Sol-Ark/Solis/Goodwe/Deye/ Growatt/SAJ/LUXPOWER Megarevo/INVT/Sermatec/ TBB/MUST/Sunsynk		 X000010
2	Schneider		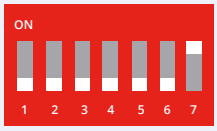 X000001

NOTICE

Fail to follow the DIP switch setting will cause the communication fault between battery and inverter, for more detail setting with different inverter/charger, please contact your supplier for consultation.

3.3.3. 3: DIP Addressing

Mode	Status	RUN	ALM	LED indicator				Description
		●	●	●	●	●	●	
Power off	-	OFF	OFF	OFF	OFF	OFF	OFF	All OFF
Standby	Normal	FLASH1	OFF	According to battery SOC				See note
	Warning	FLASH1	FLASH3					
Charge	Normal	ON	OFF	According to battery SOC (highest SOC LED: FLASH2)				See note
	Warning	ON	FLASH3					
	COCP	FLASH1	OFF	According to battery SOC				Stop charging
Discharge	Normal	FLASH3	OFF	According to battery SOC				See note
	Warning	FLASH3	FLASH3					
	CUVP/PUVP	OFF	FLASH3	OFF	OFF	OFF	OFF	Stop discharging
	DOCP	OFF	ON	OFF	OFF	OFF	OFF	Stop discharging
Temperature	CHTP/DHTP CLTP/DLTP	OFF	ON	OFF	OFF	OFF	OFF	Stop charging/dis charging
Failure	Cell/NTC failure Sensor failure MOS failure Reversed polarity /SCP	OFF	ON	OFF	OFF	OFF	OFF	Stop charging/dis charging

NOTICE

Fail to follow the DIP switch setting will cause the communication fault between battery and inverter, for more detail setting with different inverter/charger, please contact your supplier for consultation.

EN

3.3.3.4 RUN/ALM/SOC

FLASH Type	ON	OFF
FLASH1	0.25S	3.75S
FLASH2	0.5S	0.5S
FLASH3	0.5S	1.5S

NOTE: 'Warning' including items of cell imbalanced/low voltage/high current/high & low temperature.

3.4 Protection Function

Items	Description	Remark
Charge end COVP	The BMS will stop charging if any cell or PACK voltage reach the protection value and it will be auto-released only when both the pack and cell voltage are back to the "release voltage range" or there is sufficient discharge current.	
POVP		
Discharge end CUVP PUVP	The BMS will stop discharging if any cell or PACK voltage is under the protection value and it will be released only when all the cell voltages are back to the release voltage range or there is efficient charge current.	Can automatically recover. Please charge timely, otherwise it may be in Low-power mode to be over-discharged and damage battery.
CHTP DHTP	The BMS will stop charging or discharging [or both] if any cell/environment/MOS temperature is beyond the acceptable range.	Automatic recovery when temperature falls.
CLTP DLTP	The BMS will stop charging or discharging or both if any cell/environment/MOS temperature is under the acceptable range.	Automatic recovery when temperature rise
COCP	The BMS will stop charging when the charging current is higher than the protection value. And it will release from the protection when the system delays time is met.	Automatic recovery. If triggered after three consecutive times, manual intervention is required.
DOCP	The BMS will stop discharging when the discharging current is higher than the protection value. And it will release from the protection when the system delays time is met.	Automatic recovery. If triggered after three consecutive times, manual intervention is required.
SCP Reversed polarity	The BMS will stop charging when it detects short circuit or reversed polarity	Charge to release. Manual press reset
Temperature, Voltage, Current sensor failure	Enter the failure mode, manual intervention is required. No charging and discharging will occur	Manual intervention
Sleep mode	After reaching a certain condition, the BMS will enter dormancy mode to reduce BMS energy consumption	Charge, press reset or restart to activate.

⚠ CAUTION

Please re-charge the battery via MPPT, grid/ generator or other energy source within 24h if the battery is over discharged, otherwise, it may be damaged.

⚠ NOTICE

Manually short-circuit and reverse polarity will void the warranty.

EN

4. Installation

4.1 Preparation

4.1.1 Safety Compliance

The system installation must be conducted by qualified person(s) during the whole installation process. Please strictly follow the local safety regulations and related operating procedures.

4.1.2 Environment

The operating environment shall meet the following requirements:

Category	Description
Working temperature	-10^{0}C-50^{0}C (maximum operating range) 15^{0}C-30^{0}C (reccomended temperature)
Relative humidity	5%~90%, No condensation
Altitude	<3000m
Safety requirement	• Do not expose the battery to direct sunlight, rain and snow. • Do not place the battery within children/pet touchable area. • Do not place the battery near heat source and flammable material. • Do not drop, deform, impact, cut or spear with a sharp object. • Do not put heavy things on battery. • Do not disassemble the battery without Manufacturer's permission. • No conductive dust and water or other liquid to contact battery. • Follow the emergency measure if there is water invasion or electrolyte/gas leakage. • Contact your supplier within 24 hours if any product failure occurs.

EN

4.1.3 Tools

Tools	
Torque screwdriver 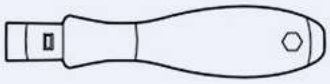	Multi-meter 
Torque wrench 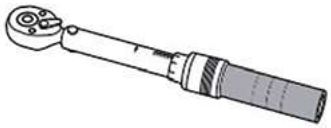	Cable crimper 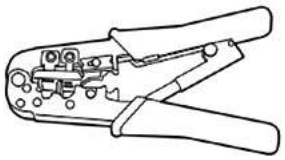
Wire stripper 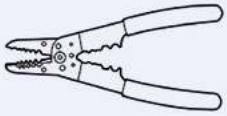	Tape measure 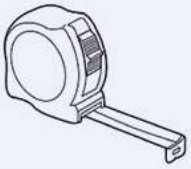
Flat-head screwdriver 	Phillips-head screwdriver 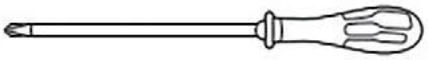
Wire stripper 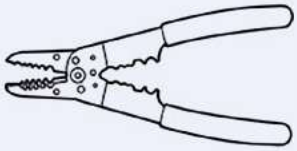	Drill 
Phillips-screwdriver bit 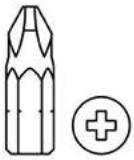	

4.2 Inspection

4.2.1 Unpacking

- Please load and unload it in accordance with the specified requirements to prevent sun and rain when you receive the equipment.
- Please check and confirm the goods (such as quantity, appearance, etc.) according to the "scope of delivery " before unpacking.
- Do take care during unpacking process to protect the surface coating of the object.
- Please record and feedback to the manufacturer if the inner packing is damaged after unpacking.

4.2.2 Scope of Delivery

Check the scope of delivery for completeness and any externally visible damage. Contact your supplier for supplementary delivery if the listed material is incomplete or damaged.

EN

General Materials *(Battery unit)*		
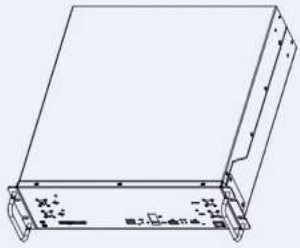 Battery Pack *1pcs		
Optional Materials *(Noted that each pack unit must be bought with one mounting kit type as default)*		
Mounted Kits Type	**Material Detail**	**Qty**
Rack mounted kits (Packing using separate carton box	A: Float nuts M6 	6pcs
	B: Combination Screw	4pcs
	C: Battery to battery parallel positive cable(250mm) 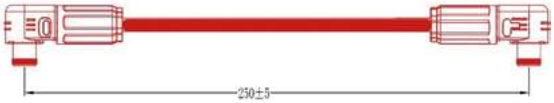	1pcs
	D: Battery to battery parallel negetive cable(250mm) 	1pcs
	E: Battery to battery grounding cable(300mm) 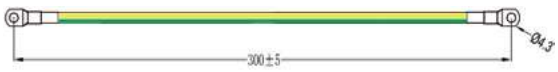	1pcs
	F: Battery to battery communication cable(250mm) 	1pcs

EN

Stack mounted kits (Packing using separate carton box)	A: Stacking components	4pcs
	B: Head screw M4	16pcs
	C: Battery to battery parallel positive cable(250mm) 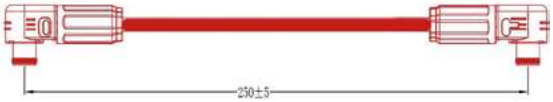	1pcs
	D: Battery to battery parallel negetive cable(250mm) 	1pcs
	E: Battery to battery grounding cable(300mm) 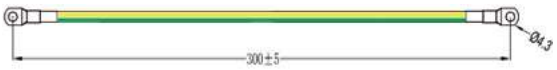	1pcs
	F: Battery to battery communication cable(250mm) 	1pcs
Floor mounted kits (Packing using separate carton box)	A: Outer hexagon combination bolt	4pcs
	B: Cross recessed small countersunk head screws	12pcs
	C: Battery to battery parallel positive cable 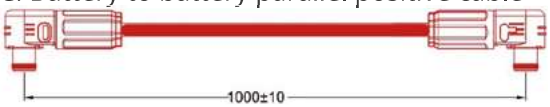	1pcs
	D: Battery to battery parallel negetive cable 	1pcs
	E: Battery to battery grounding cable 	1pcs
	F: Battery to battery communication cable 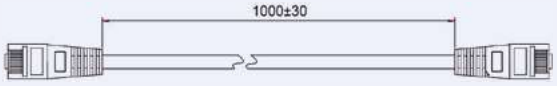	1pcs
	G: Base 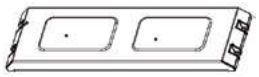	1pcs
	H: Decorative panel 	1pcs
	I: Side fixing parts 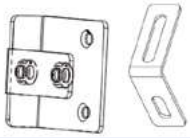	2pcs
	J: Expansion bolt M6*50	6pcs

EN

4.2.3 External Cable Kits

Cables connected to inverter or junction box belong to an "External Cables kit", NOT included in battery carton. Customers need to purchase it separately, the information are as below.

<table>
<tr><th>Type</th><th colspan="3">Detail</th><th>Qty</th></tr>
<tr><td rowspan="2">Power cable</td><td colspan="3"></td><td>1pcs</td></tr>
<tr><td colspan="3"></td><td>1pcs</td></tr>
<tr><td>Grounding cable</td><td colspan="3">
</td><td>1pcs</td></tr>
<tr><td rowspan="6">Inverter communication cable
(1 out of 3)</td><td colspan="3">
</td><td>1pcs</td></tr>
<tr><td></td><td>Battery side pin</td><td>Inverter side pin</td><td>Inverter brand</td></tr>
<tr><td>Version I(CAN):</td><td>Pin 4
Pin 5
Pin 6</td><td>Pin 7
Pin 8
Pin 3</td><td>Victron</td></tr>
<tr><td>Version II(CAN):</td><td>Pin 4
Pin 5</td><td>Pin 4
Pin 5</td><td>SMA/Sol-ark/ Solis/Goodwe Deye/Growatt/SAJ/ Megarevo/INVT/ Sermatec/TBB/ Sunsynk</td></tr>
<tr><td>Version III(RS485):</td><td>Pin 1
Pin 2</td><td>Pin 3
Pin 5</td><td>Voltronic /MPP/ Alpha-outback/ Phocos/Kodak</td></tr>
</table>

For inverter communication PIN definition detail, please check **Appendix I**

⚠ NOTICE

Keep the unused cable pins NULL to avoid affecting the closed loop communication.

⚠ NOTICE

A ground connection of communication cable may be required from some inverters, please follow the rules from inverter manufacturers.

EN

4.3 Start Installation

⚠ Qualified person

4.3.1 Remainder

Please check that the equipment and conditions meet the requirements for proper installation highlighted below:

- Check that there is enough space for installation, and if the load-bearing capacity of the bracket or cabinet meets the weight requirements.
- Check whether the power cable pair(s) used meet the maximum current requirements for operation.
- Check whether the overall layout of the power supply equipment and batteries at the construction site is reasonable.
- Check whether the installer is wearing anti-static wristband.
- Check whether there are at least two people on the construction site for installation work.
- Check if there are potential risks at location of installation site, e.g. flooding, sun exposure, corrosion, and salt spray.

4.3.2 Procedures

⚠ CAUTION

Injuries may result if the product is lifted incorrectly or dropped while being transported or mounted.
Wear suitable personal protective equipment for all work on the product

4.3.2.1 Rack Mounted

i. Take the battery pack out from carton.

ii. Get the Rack or cabinet ready and place it horizontally at a reasonable location.

iii. Place the battery on the rack or cabinet tray via manual-lift, Insert the screws and fasten the battery to the rack or cabinet.

iv. Finish the cable connection

EN

4.3.2.2 Stack Mounted

i. Take the battery pack out from the carton box.	
ii. Remove the mounting ear from both side of the battery.	
iii. Install the stacking component at the four corners of the battery.	
iv. Remove the hook on the stacking component of the bottom battery of each stack.	
v. Put another battery on top of the previous module, and align the locating holes and connect the 4 lockers together.	
vi. The maximum number in each stack is 4 modules. vii. Complete the cable connection	

NOTE: Do not stack the batteries directly.

⚠ CAUTION

Please fix the parallel cable between batteries with the wall or other part to avoid enduring the gravity of conductor for long time, resulting in an increase in the internal resistance of the connection.

EN

4.3.2.4 Floor Mounted

i. Take the battery pack out from the carton box.	
ii. Remove the mounting ear from both side of the battery.	
iii. Place the base near the wall, align with the wall and make sure the distance is between 10mm and 35mm. iv. Drill holes on the ground for the M6 expansion bolt. The drilling depth should be at least 50 mm, insert the bolt. (this step is optional) v. Fix the base with nut. (this step is optional)	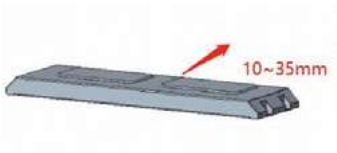
vi. Fix the decorative panel and wall hang ear with the battery using the combination screws and place the battery onto the base. vii. Adjust the position of the hang ear, make sure they can connect wall smoothly, mark the hole position of both hang “ears”.	
viii. Remove hang “ear” from the battery, and drill holes in the wall for the M6 expansion bolt. The drilling depth should be at least 50 mm, insert the bolt. ix. Fix the hang “ear| with battery and fasten the bolt with nut.	
i. Finish the cable connection	

4.3.3 Tips

4.3.3.1 Installations not Allowed

Direct upside down	Left side flip	Right side flip
 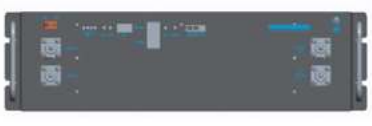		

EN

4.3.3.2 Other Installation

Hang on the wall with Holder	Placing on the desk
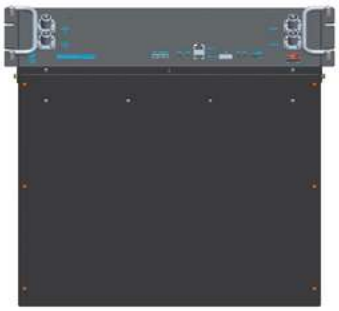	
Please make sure the holder can handle a minimum weight of 50kg	Please make sure the desk can bear the total weight.

NOTICE

ANY other installations, please avoid the battery directly contacting the ground and avoid of high salinity, humidity to prevent the product from rusting and corrosion.

5. Cable Connection and Commissioning

Qualified person

5.1 Get the Battery Operational

5.1.1 Ensure all the battery is in OFF mode, check and confirm the installation is tightened and stable.
5.1.2 Check that the number and specification of cable kit accessories are correct according to the Scope of delivery item, if you are making cable yourself, please follow the manufacturer's requirements.
5.1.3 Switch on all batteries individually before wiring, check whether there is any alarm/protection information, if yes, turn to troubleshooting. Then switch off all batteries.

5.2 Grounding cable connection

5.2.1 Take out the grounding screw on the battery panel and get the cable conductor through it.
5.2.2 Fix them together, with a screwdriver and tighten it.
5.2.3 Connect the grounding cable with next battery module.

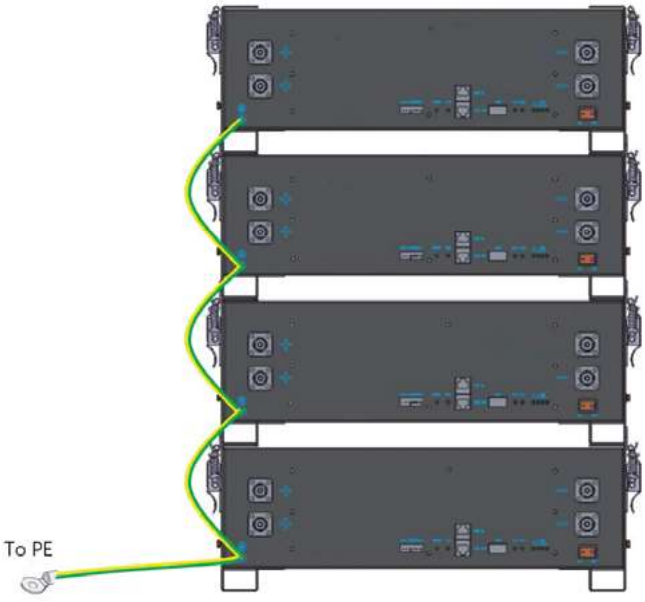

EN

5.3 Communication Cable Connection

5.3.1 Take out battery to battery communication cable.

5.3.2 Confirm the location of Master battery, insert the RJ45 plug into the Link Out port and connect the other side to next battery Link IN port, "daisy chain" all the batteries.

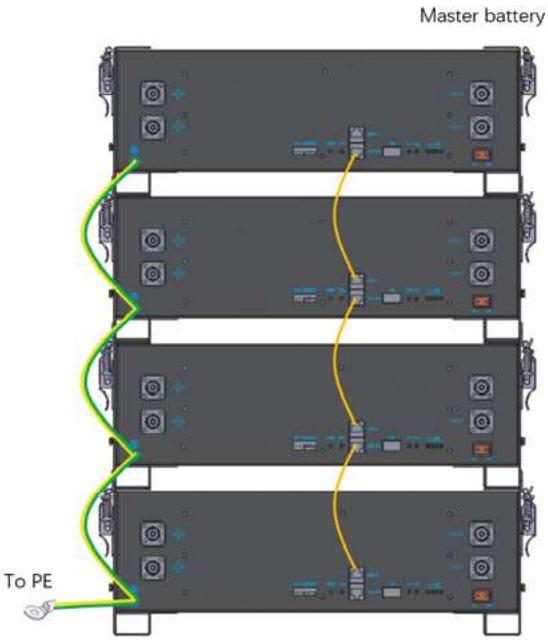

NOTE: the module with empty Link IN port is Master battery

NOTICE

The BMS inside the battery pack will automatically terminate BOTH end of CANBUS pins, DO NOT plug the 120Ω terminator again.

5.4 DC Power Cable Connection

5.4.1 Take out the battery to battery power parallel cable.

5.4.2 Insert the Plug into the power socket until you hear the 'click' sound.

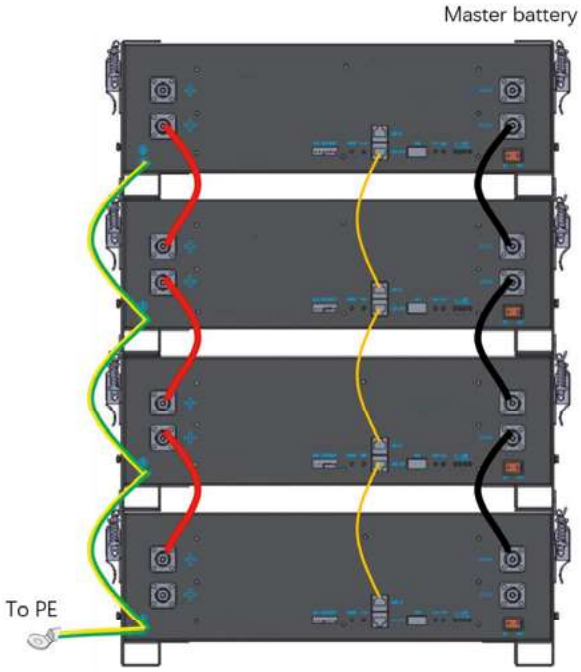

5.5 Connecting with Inverter

CAUTION

Confirm inverter AC input and PV input is disconnected before wiring connection, and the DC/signal switch of inverter/charger is in off status

5.5.1 Connecting Master battery Link IN port with inverter CAN or RS485 communication port via inverter communication cable (Version I/II/III or customized).

5.5.2 Connecting battery OUTPUT (+) with inverter battery INPUT (+), battery OUTPUT (-) with inverter battery INPUT (-), an external disconnection breaker between battery system and inverter is recommended, choose the corresponding power cable pair and wiring them correctly.

NOTICE

Choose the suitable disconnection breaker considering the inverter power/current, rated voltage, tripping characteristic etc.

EN

Wiring diagram allowed:

i. Single pair cable wiring----100A, 5KW rating

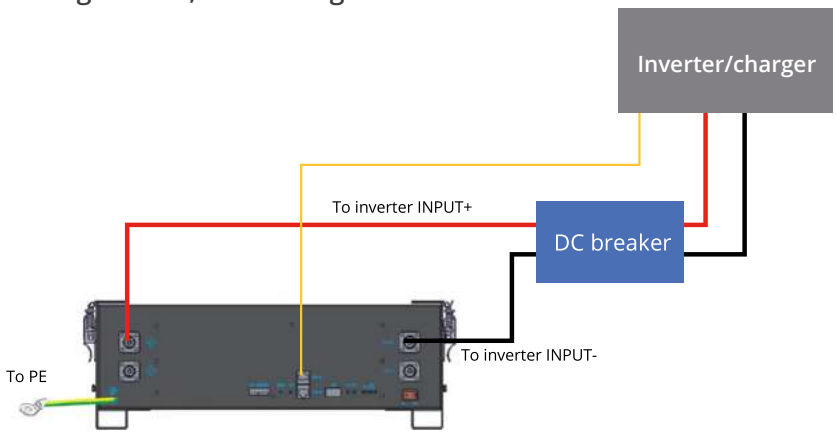

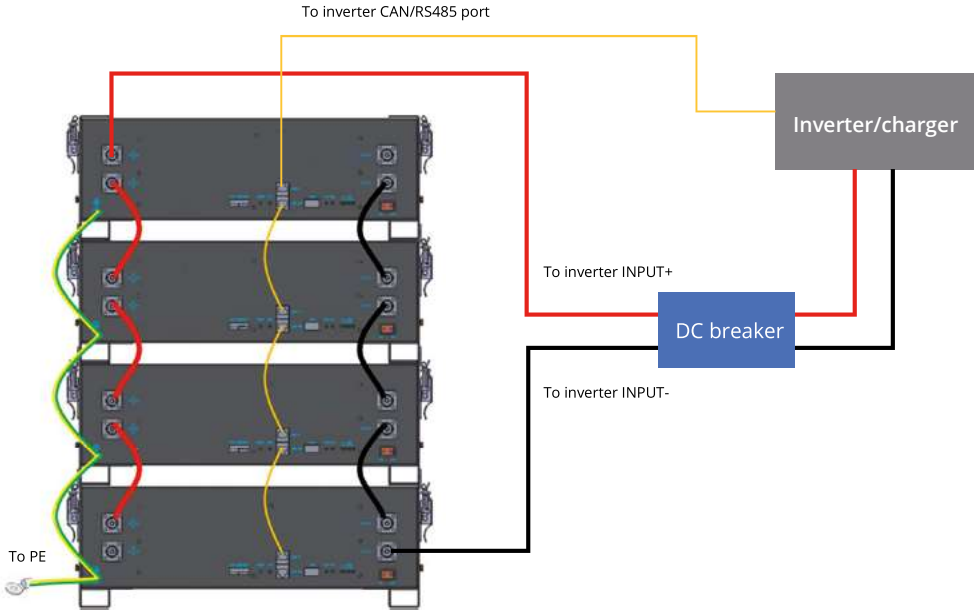

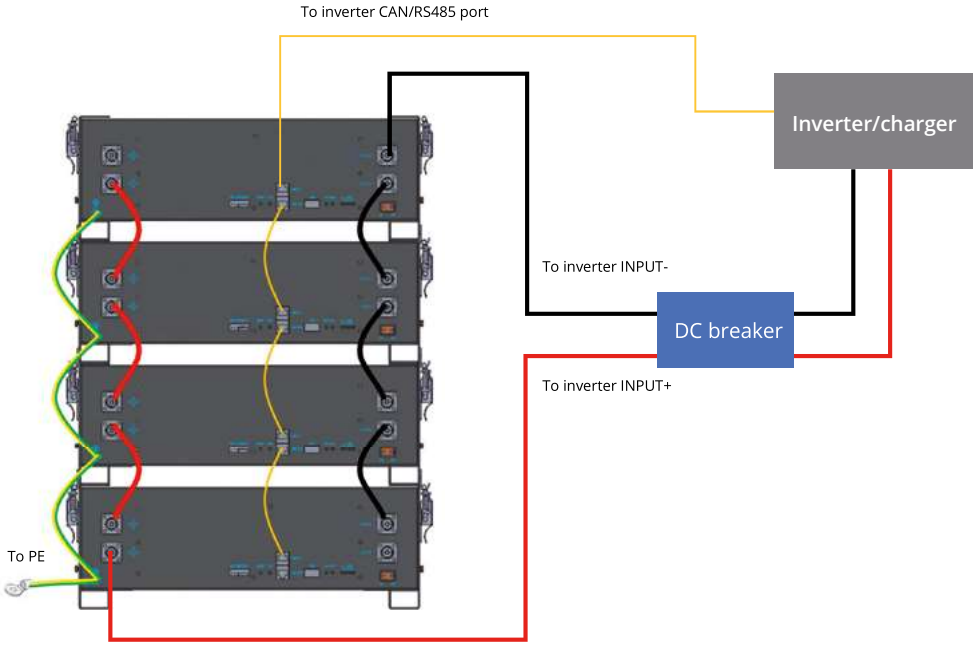

EN

ii. Double pairs cable wiring----200A, 10KW rating

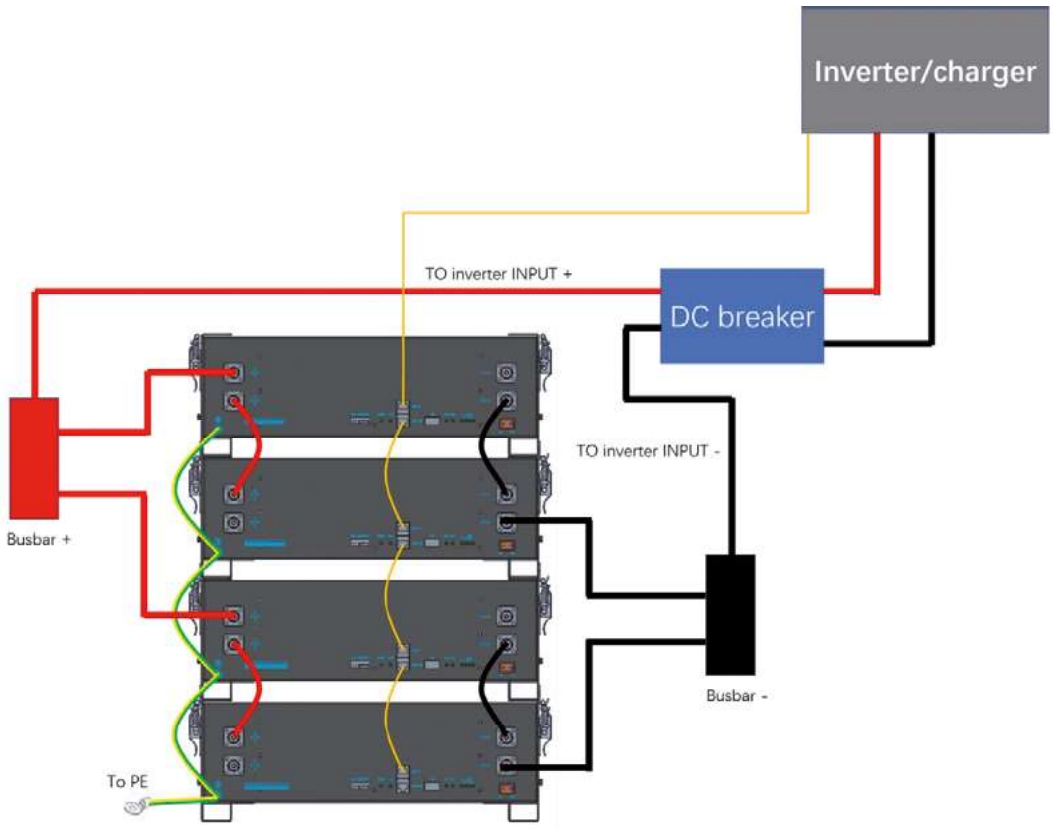

EN

iii. Multiple pairs cable wiring----400A, 20KW rating

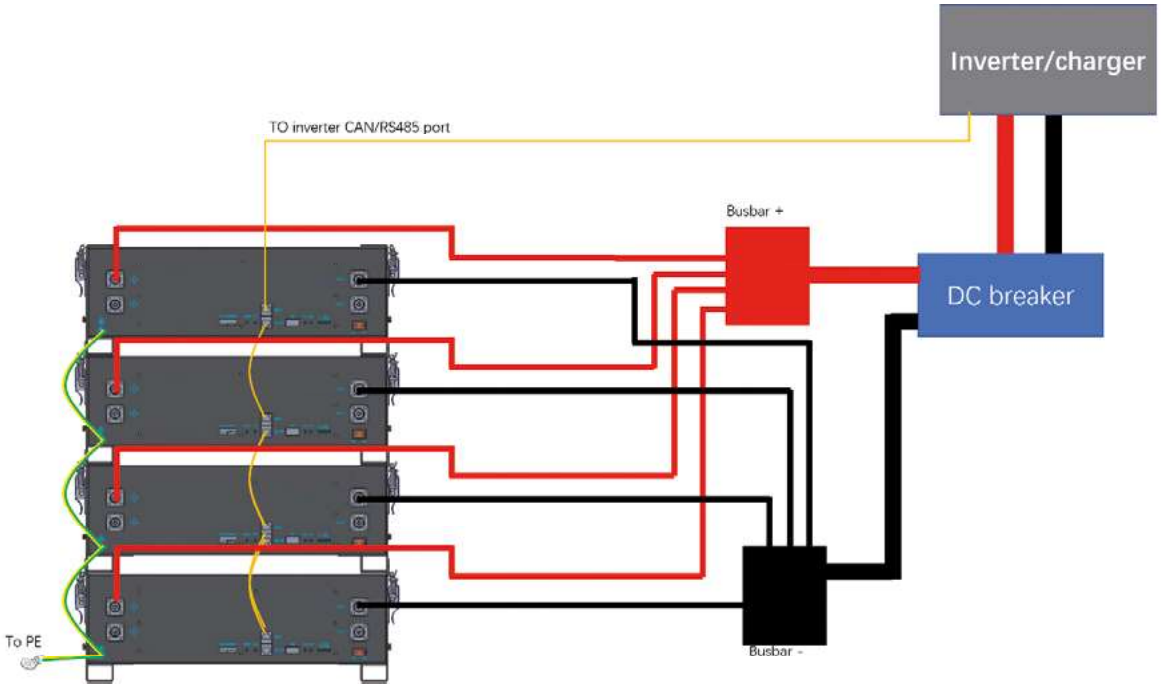

iv. Multiple towers and inverters cable wiring

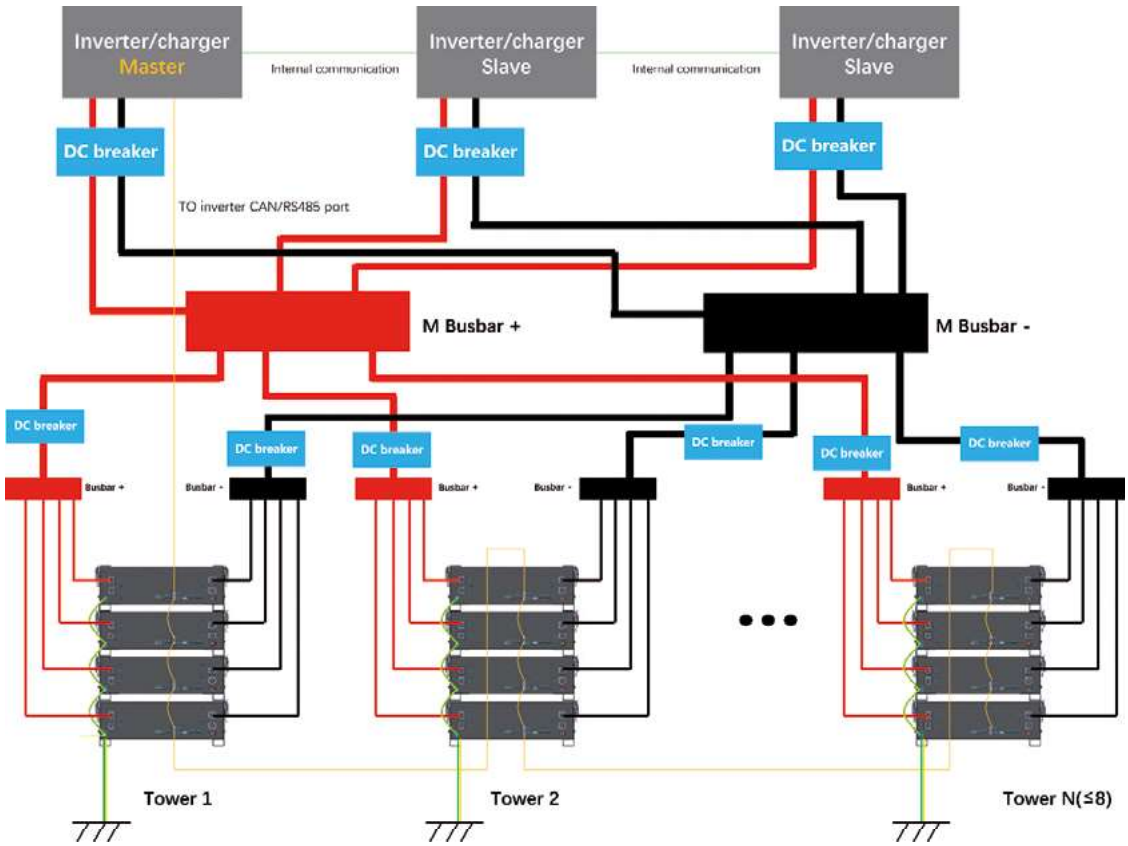

EN

Wiring diagram not allowed:

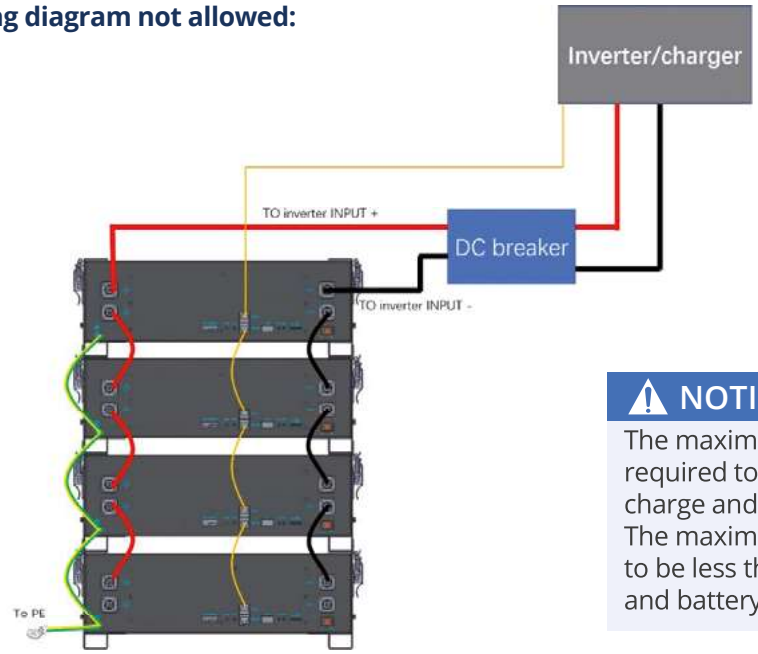

NOTICE

The maximum communication cable length is required to be less than 15m between inverter/charge and battery.
The maximum power cable length is suggested to be less than 10m between inverter/charge and battery.

For Australia market:

In order to meet the AS/NZS 5139:2019 installation standard, a battery disconnection breaker is a mandatory between each battery module and inverter, please choose appropriate breaker following the standard.

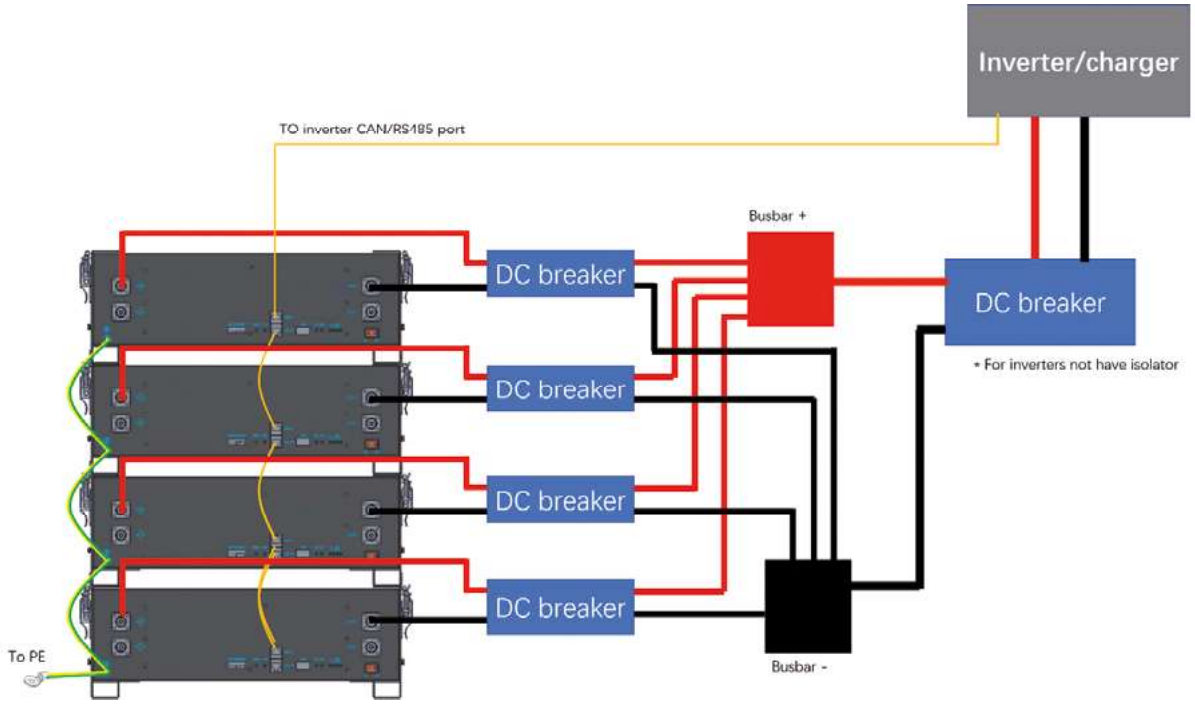

For other type of installation, please also follow the rules above to wiring your system.

CAUTION

The maximum tolerance current of each power cable and terminal is 125A, 100A for continuously is suggested, please use corresponding number of power cable pairs according to the field configuration and local connection requirements, standards, and directives.

EN

5.6 Commissioning

5.6.1 Set the DIP address of the Master battery (and the Slave battery if there is any RS485 baud rate changed).

5.6.2 Switch on all battery modules, wait for 10s, make sure that only M/S led is on Master battery.

5.6.3 Turn on the breaker between the inverter and battery if there is any, then turn on the inverter/ charger isolator.

5.6.4 Finish the setting on inverter/charger or any other control devices, if everything is correct, you are ready to use the system.

No.	Inverter setting parameters	Details
1	Absorption voltage	56.0V
2	Float voltage	54.6V
3	Re-charge/Generator start voltage	≥50V
4	Re-start voltage	52V
5	Low SOC limit (Grid-tied)	10/20% (differ from inverter brand)
6	Low SOC cut-off (Off-grid)	4%
	Low Voltage cut-off	48.0V
7	Rated charging current limited value	50A*N (N is the Quantity of the battery pack)
8	Rated discharging current limited value	50A*N (N is the Quantity of the battery pack)
9	Max. charging current limited value	70A*N (N is the Quantity of the battery pack)
10	Max. discharging current limited value	100A*N (N is the Quantity of the battery pack)
11	Force charge/ Activate	Enable

For more information to connect with different inverter/charger, please contact your supplier for technical support.

⚠ CAUTION

If your system is a back-up or off-grid system, make sure your configuration can cover the worst-case scenario to avoid battery to be over-discharged.

5.7 Switch Battery Off

5.7.1 Turn off the inverter.

5.7.2 Turn off the disconnection breaker [if there is any].

5.7.3 Turn off all the batteries signal switch.

EN

6. Troubleshooting and FAQ

No.	Inverter setting parameters	Details
Unable to start	1. Power on battery and press RESET for 6 seconds to observe whether the battery can be started. 2. Charge the battery use a charger or inverter to provide 54~57.6V voltage and observe that it can be started.	If the abnormal status still ON after above steps, please contact your supplier. If there is any other situation(s) excluding in this table, turn off the faulty battery & contact your supplier.
Unable to charge	1. Check whether the cable connection between the battery and the inverter/charger is correct. 2. Check whether the inverter/charger settings are correct. 3. Check whether the battery is in charge protection mode. If yes, try to discharge the battery.	
Unable to discharge	1. Check whether the cable connection between the battery and the inverter/charger is correct. 2. Check whether the battery is short circuited, reverse polarity connection, pre-charge failure during connection with inverter etc. 3. Check whether the battery is in discharge protection mode. If yes, try to charge the battery.	
High/Low temperature	1. Stop the battery system for a while, check whether the location of the installation meets the temperature requirements. 2. Avoid continuous full charging and discharging.	
High current	Check that the configuration and parameter settings on the inverter/ charger are correct	
ALM always on	1. Check the fault information on the inverter APP or display [if possible]. 2. Ask your supplier to offer BMS monitoring software to locate the reason and back to them for solution.	
Communication fail	1. Check that the communication cable type is correct and is connected well. 2. Check that the DIP switch setting is correct. 3. Check that the inverter protocol related settings are correct. 4. Check that both battery and inverter are working properly.	

EN

Q1: Battery maximum SOC is 98~99% and never goes to 100%SOC during daily cycle use, why?

This is normal and has no influence on capacity, usually BMS will calibrate the SOC to 100% when its reached the cut-off current or trigger HVP, however, to avoid battery from being overcharged and to extend the cycle life as longer as possible, we left a capacity margin and set a charging profile to make the battery charge slowly near full, please float the battery about 0.5~1 hours to calibrate the SOC.

Q2: 'High voltage' and 'cell unbalance' warning and alarm, does this mean that the battery is damaged?

No. This is not unusual and may happen on new batteries that are not balanced yet, please lower the maximum charge voltage (54.6V) and float the battery via grid or generator. If not resolved, please contact your supplier.

Q3: When having multiple batteries in parallel connection, the battery on the end can't be fully charged.

Pay attention to your wiring diagram, please always follow the manual's wiring advises and choose proper cable sizing and pairing.

Q4: The current is 0A when connecting with a very small load at the situation that having multiple batteries in parallel connection, how to solve it?

Each BMS has a threshold current of 0.5A (~25W) before it begins to report, this may lead to the inaccurate display of the current draw.

Q5: SOC is not accurate or suddenly jumps to 100% during charging.

This mostly happens in off-grid applications on batteries that have not had their SOC calibrated for a long time or in situations like Q4, that with inverter in Idle mode or a small DC load or store the battery for a long time, we suggest fully charging at once the batteries per month [refer to Q1.]

Q6: The system is still running when the inverter log shows 'internal failure' Warning.

This is our programmed logic, and this warning flag indicates there is 1 or more module(s) that is in offline from communication from the system, the system will derate until communication is recovered.

Q7: Inverter pulling power from Grid to charge batteries in self-consumption mode.

When certain conditions are reached, such as low state of charge etc., battery will send charge request to ask inverter to charge the batteries, to avoid this, please discharge DOD as the manual suggests.

EN

7. Transport, Storage

- Do not violently shake, impact, or squeeze, and prevent sunshine and rain during transportation.
- Do take care and strictly prevent falling, rolling, and heavy pressure during loading and
- unloading.
- The battery should be placed in a dry, clean, dark, and well-ventilated indoor environment for long term storage, and the recommended storage temperature range is 15~30^{0}C.
- Ensure that there are no harmful gases, flammable and explosive substances, and corrosive chemical substances in the storage location.
- The batteries should be stored and transported at close to 50% SOC, do not store over 80%SOC for prolonged periods of time.
- If not used for a long time, the batteries need to be charged every 6 months.
- No dropping, no pile up over 6 layers, and must be kept face up.

8. Disposal of Battery

Disposal of the battery must comply with the local applicable disposal regulations for electronic waste and used batteries, please review your local Battery recycling or management regulations or contact your supplier for more information.

EN

Appendix I

Connect with Victron GX & inverter/charger

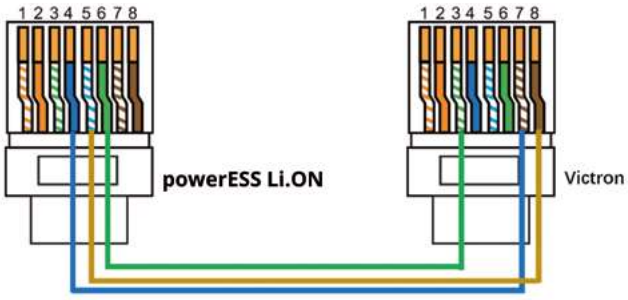

Battery Link IN port	Victron VE.CAN/BMS CAN	Cable suggest
Pin4	Pin7	Version-I(CAN)
Pin5	Pin8	
Pin6	Pin3	

Connect with SMA inverter/charger

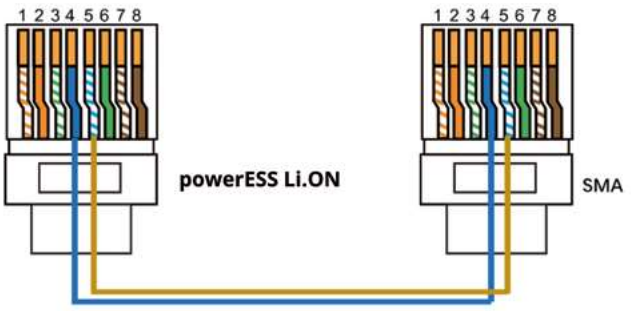

Battery Link IN port	SMA sunny island	Cable suggest
Pin4	Pin4	Version-II(CAN)
Pin5	Pin5	
Pin6 (optional)	Pin2 (optional)	

Connect with Schneider inverter/charger



Battery Link IN port	Conext Gateway	Cable suggest
Pin4	Pin14	customized
Pin5	Pin12	
Pin6 (optional)	Pin10 (optional)	

Connect with Studer inverter/charger

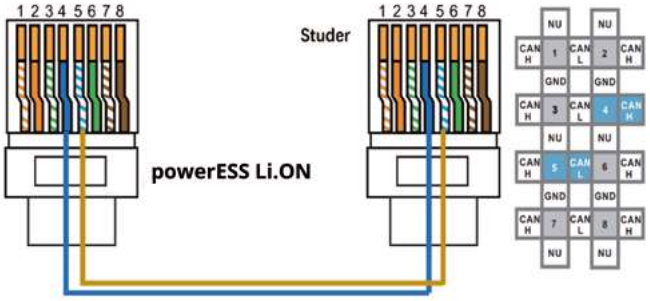

Battery Link IN port	X-Com CAN	Cable suggest
Pin4	Pin4	Version-II(CAN)
Pin5	Pin5	

Connect with GOODWE hybrid inverter

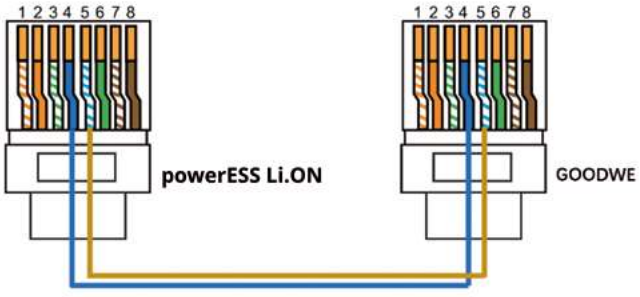

Battery Link IN port	GOODWE BMS CAN	Cable suggest
Pin4	Pin4	Version-II(CAN)
Pin5	Pin5	

Connect with Sol-Ark hybrid inverter

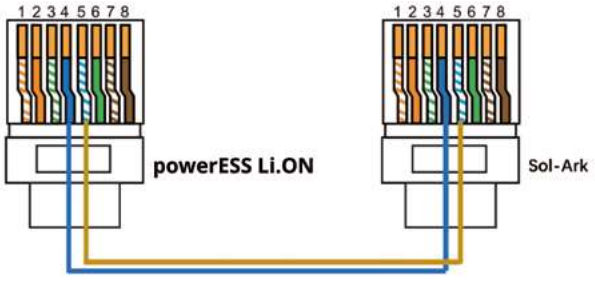

Battery Link IN port	Sol-Ark CAN	Cable suggest
Pin4	Pin4	Version-II(CAN)
Pin5	Pin5	
Pin6 (optional)	Pin6 -outdoor Pin2 –indoor (optional)	

EN

Connect with Growatt inverter

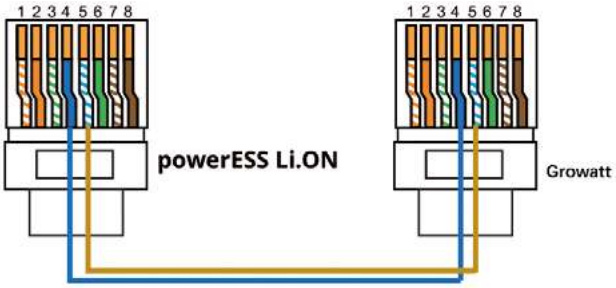

Battery Link IN port	Growatt BMS communication port	Cable suggest
Pin4	Pin4	Version-II(CAN)
Pin5	Pin5	

Connect with Solis inverter

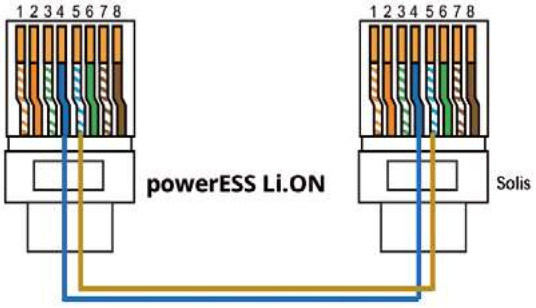

Battery Link IN port	Solis CAN	Cable suggest
Pin4	Pin4	Version-II(CAN)
Pin5	Pin5	

Connect with Deye hybrid inverter

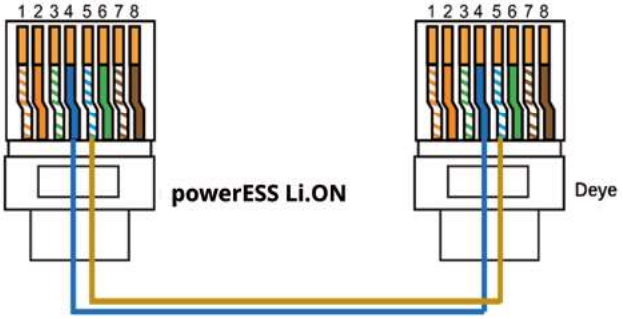

Battery Link IN port	Deye CAN	Cable suggest
Pin4	Pin4	Version-II(CAN)
Pin5	Pin5	

Connect with SUNSYNK hybrid inverter

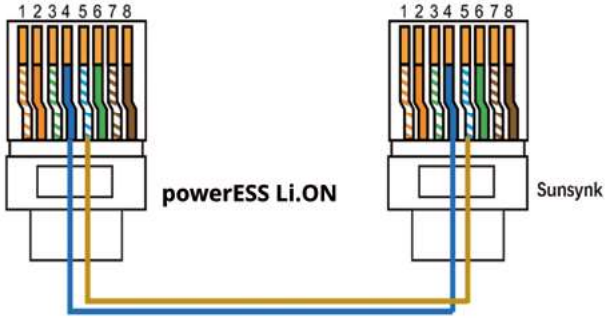

Battery Link IN port	Sunsynk CAN	Cable suggest
Pin4	Pin4	Version-II(CAN)
Pin5	Pin5	

Connect with SAJ hybrid inverter

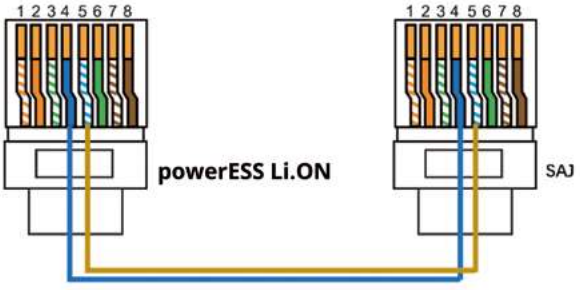

Battery Link IN port	SAJ CAN	Cable suggest
Pin4	Pin4	Version-II(CAN)
Pin5	Pin5	

Connect with LUXPOWER inverter

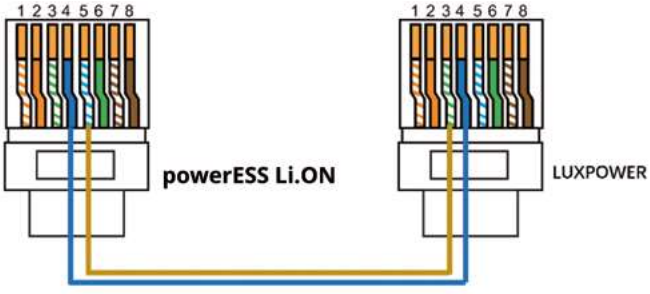

Battery Link IN port	LUXPOWER CAN	Cable suggest
Pin4	Pin4	customized
Pin5	Pin3	

EN

Connect with Megarevo/INVT inverter

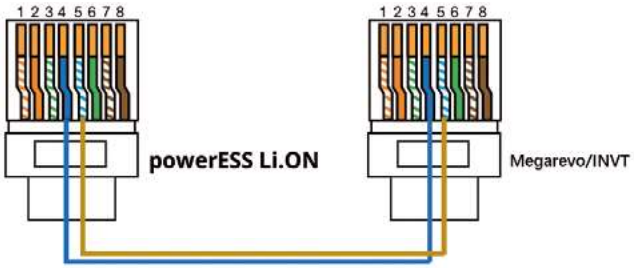

Battery Link IN port	Megarevo CAN	Cable suggest
Pin4	Pin4	Version-II(CAN)
Pin5	Pin5	

Connect with MUST inverter

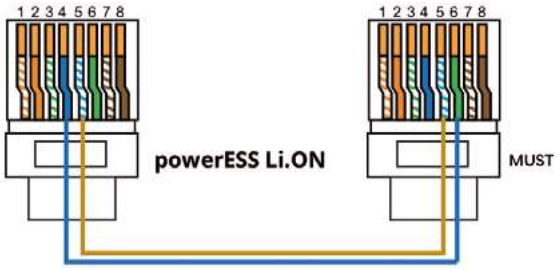

Battery Link IN port	MUST CAN	Cable suggest
Pin4	Pin6	customized
Pin5	Pin5	

Connect with Alpha & Outback energy inverter

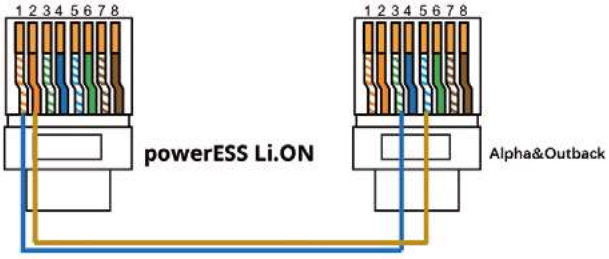

Battery Link IN port	Alpha&Outback BMS communication	Cable suggest
Pin1	Pin3	Version-III(RS485)
Pin2	Pin5	

Connect with Voltronic inverter

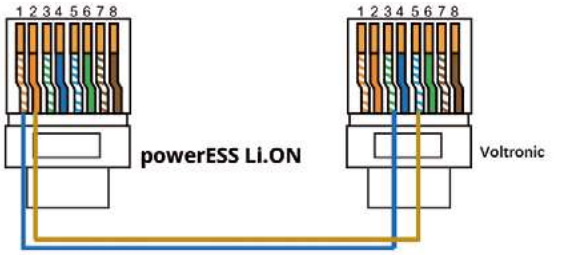

Battery Link IN port	Voltronic BMS communication	Cable suggest
Pin1	Pin3	Version-III(RS485)
Pin2	Pin5	

Connect with Phocos inverter

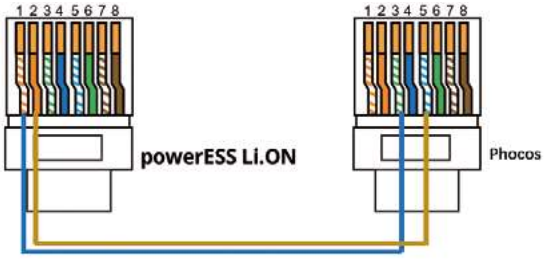

Battery Link IN port	Phocos BMS communication	Cable suggest
Pin1	Pin3	Version-III(RS485)
Pin2	Pin5	

Connect with Mpp solar inverter

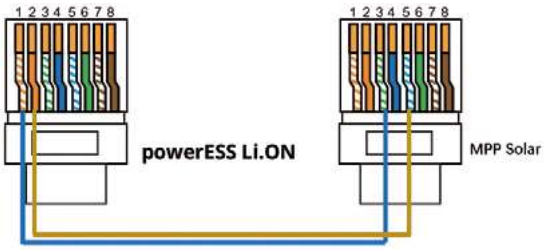

Battery Link IN port	MPP BMS communication	Cable suggest
Pin1	Pin3	Version-III(RS485)
Pin2	Pin5	

powerESS L.I.ON

Sunlight Group Energy Storage Systems
Headquarters Greece T: +30 210 624 5400

info@sunlight.gr
the-sunlight-group.com