CT INSTALL ATTENTIONS

- Please be aware the CT must be positioned around LIVE wire only with arrow pointing TOWARDS inverter.

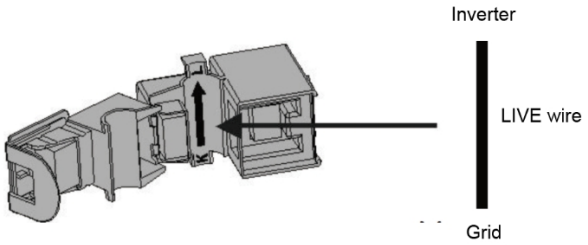

- Please be aware when CT twist pair cable connects to two pin plug, the two wires must be installed as below.

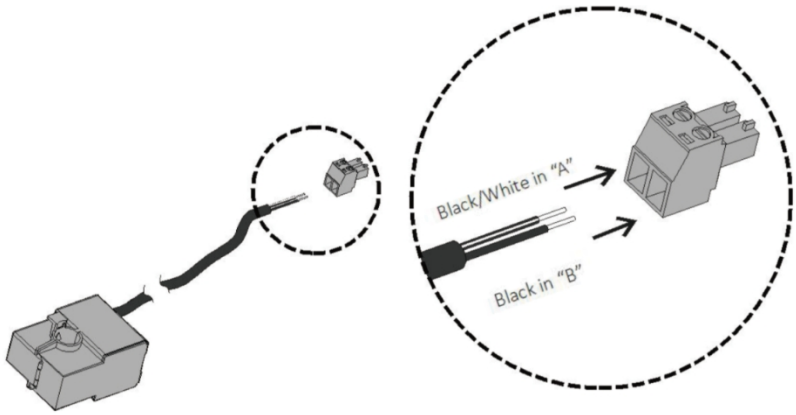

- If the inverter is installed in front of distribution board, the CT install position is as below.

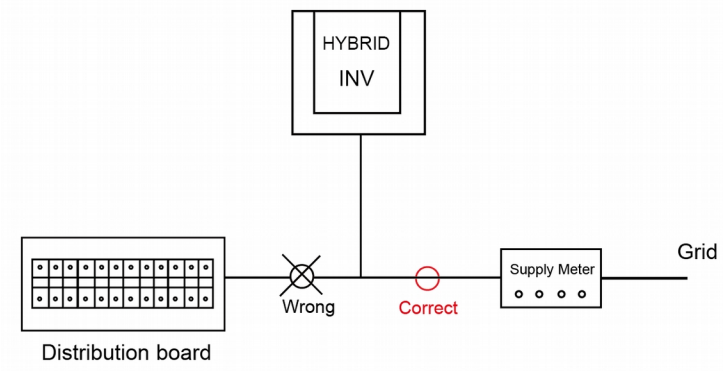

- If the inverter is wired in the distribution board, the CT install position is as below.

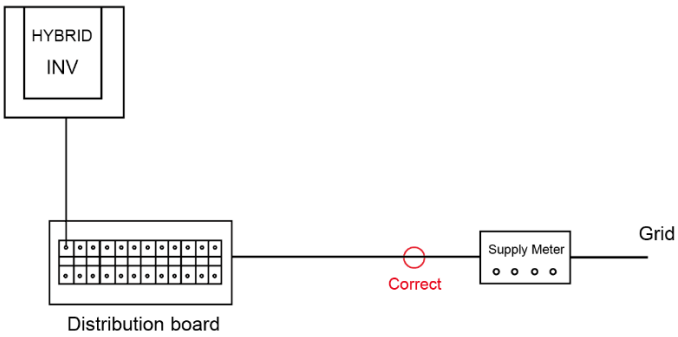

- If there has been installed an inverter or AC coupled energy storage system already, the first please ensure they can not be wired into distribution board, then the new hybrid system and CT install positions are as below.

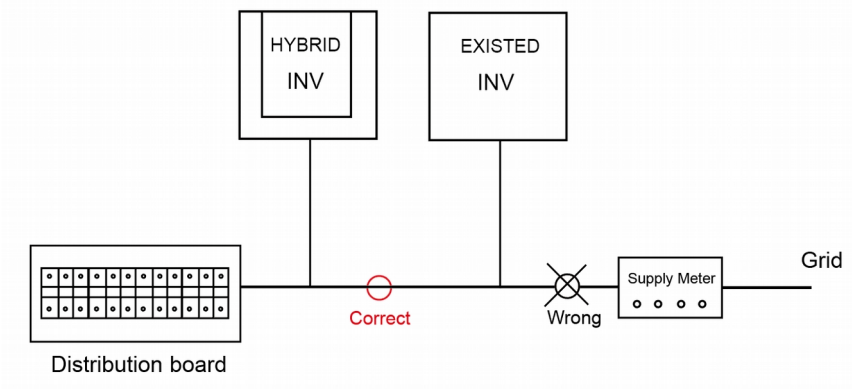

- Please be aware the CT must be installed on the same phase as the hybrid system.
- Please be aware the CT can not be wired on the distribution board branches.

