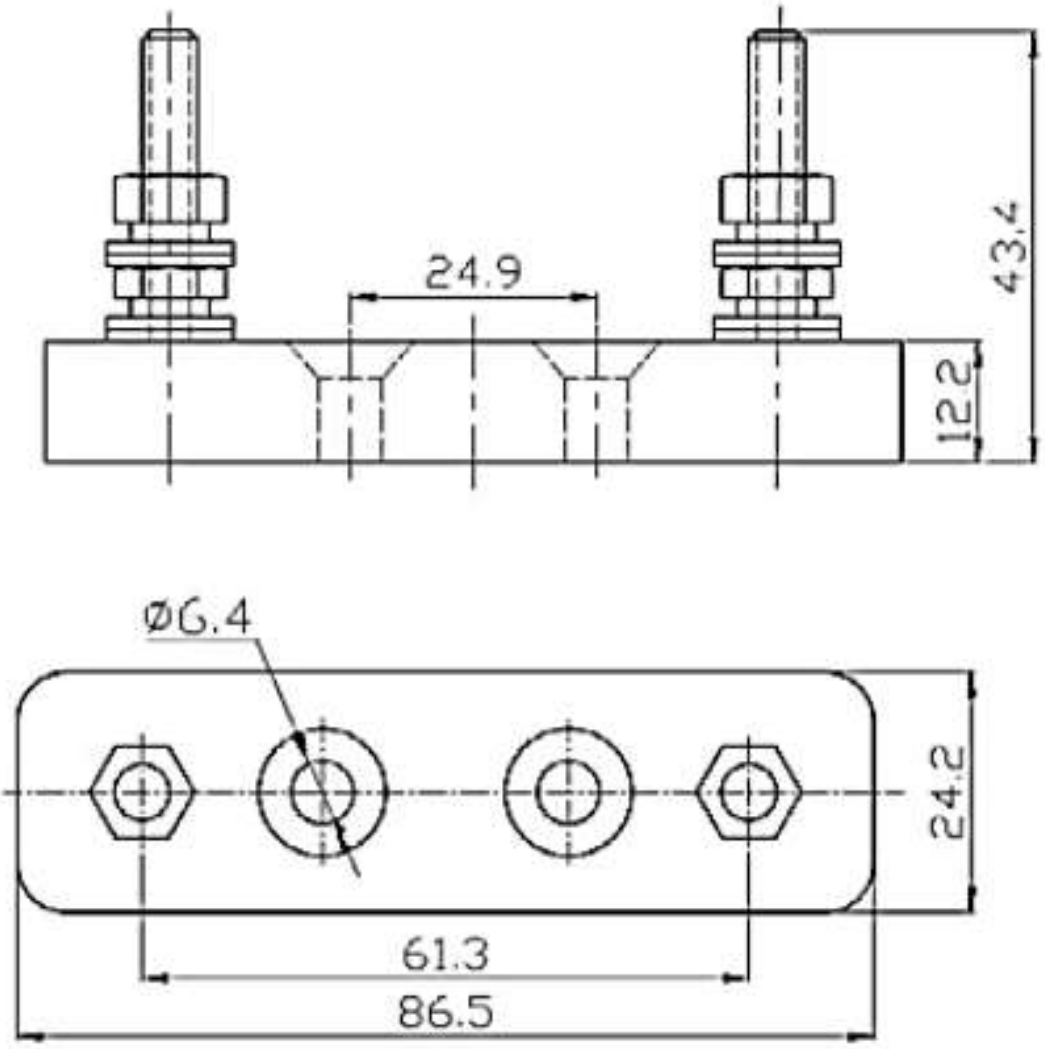

Fuse holder for ANL fuse

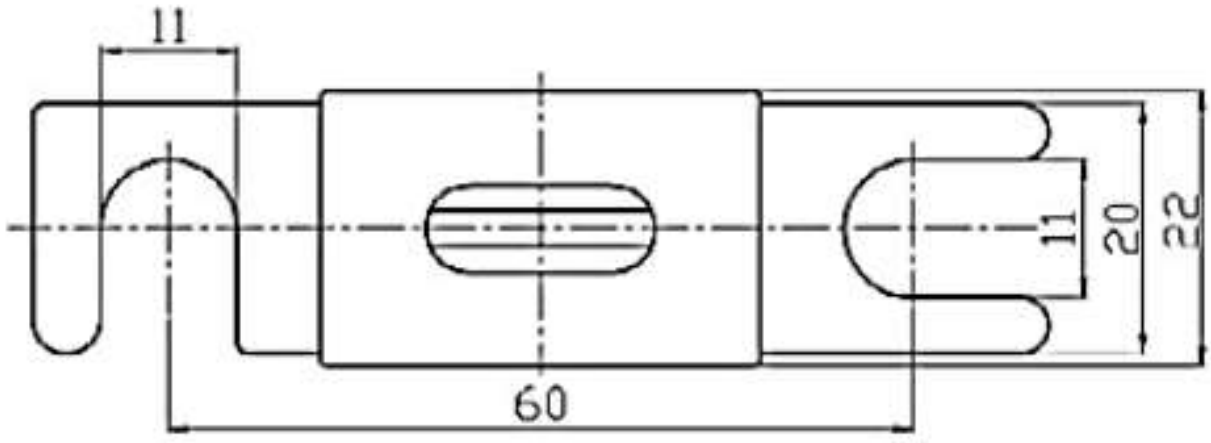

ANL fuse